Kulthorn Group

HERMETIC COMPRESSORS

Kulthorn Kirby

World Class Products for Refrigeration & Air Conditioning

Kulthorn Kirby
Public Company Limited

Model Number System

Family Release Variant : A = 1 st., B = 2 nd., etc.

- Abbreviated Nominal Rated BTU Capacity at 60Hz.
- In this example (4) total digits, with the first two (40) indicating 4,000 BTU/Hr. capacity.

AE A 4 4 40 Y - 1

Electricity Supply Code

None - 220 - 240V/50Hz		**3PHASE**	
-1	- 115V/60Hz	-9	= 380-420V/50Hz , 480V/60Hz
-2	- 208-230V/60Hz	-XG	= 380-420V/50Hz , 440-460V/60Hz
-3	- 100V/50-60Hz	-XT	= 200-220V/50Hz , 220-230V/60Hz
-4	- 110V/60Hz	-XI	= 380V/60Hz
-5	- 127V/60Hz	-XK	= 480V/60Hz
-6	- 220V/50-60Hz	- SR	= Start & Run Capacitor.
-7	- 127V/50-60Hz		
-8	- 110-115V/60Hz		

Refrigerant

A,V	- R12	G	- R22/R407C
E	- R22	M	- R600a
Y	- R134a	N	- R290
Z	- R404A/R507	B	- R410A

Application

1 = Low Back Pressure. Motor With Normal Starting Torque.
2 = Low Back Pressure. Motor With High Starting Torque.
3 = High Back Pressure. Motor With Normal Starting Torque.
4 = High Back Pressure. Motor With High Starting Torque.
5 = Air Conditioning. Motor With Normal Starting Torque.
6 = Medium Back Pressure. Motor With Normal Starting Torque.
7 = Medium Back Pressure. Motor With High Starting Torque.
8 = Air Conditioning (High eff.) Motor with Normal Starting Torque.
9 = Commercial Back Pressure. Motor with High Starting Torque.
0 = Commercial Back Pressure. Motor with Normal Starting Torque.

Compressor Family : AZ-AZA-AE-BA-CA-WJ-AW-KA-LA

OUR VISION : To be the leader in the motor compressor businees in ASEAN

AZ *Series*

Model	Voltage	Hz.	App.	Motor Type	Disp. (CC)	Cooling (BTU/Hr)	Cooling (W)	Input (W)	COP W/W	RLA (A)	LRA (A)	Start CAP. MFD	Start CAP. VAC.	Run CAP. MFD	Run CAP. VAC.	Dim. "A"
AZ SERIES																**R 134a**
115 V/60 Hz. (LOW BACK PRESSURE)																
AZ 1316Y-1	115	60	LBP	R.S.I.R.	2.23	154	45	62	0.73	1.1	11	No	No	No	No	162
AZ 1320Y-1	115	60	LBP	R.S.I.R.	2.95	242	71	76	0.93	1.1	11	No	No	No	No	162
AZ 1327Y-1	115	60	LBP	R.S.I.R.	3.28	287	84	88	0.95	1.3	16	No	No	No	No	168
AZ 1330Y-1	115	60	LBP	R.S.I.R.	3.59	297	87	93	0.94	1.3	12	No	No	No	No	168
AZ 1340Y-1	115	60	LBP	R.S.I.R.	5.00	450	132	123	1.07	1.9	20	No	No	No	No	172
AZ 1350Y-1	115	60	LBP	R.S.I.R.	5.59	505	148	143	1.03	2.1	18	No	No	No	No	178
220-240 V/50 Hz. (COMMERCIAL BACK PRESSURE)																
AZ 0349Y	220-240	50	CBP	R.S.I.R.	2.95	512	150	110	1.36	0.7	7	No	No	No	No	162
AZ 0387Y	220-240	50	CBP	R.S.I.R.	4.00	734	215	144	1.49	1.0	10	No	No	No	No	172
AZ 0411Y	220-240	50	CBP	R.S.I.R.	5.59	955	280	189	1.48	1.2	11	No	No	No	No	178
AZ 9387Y	220-240	50	CBP	C.S.I.R.	4.00	734	215	144	1.49	1.0	10	36-43	330	No	No	172
AZ 9411Y	220-240	50	CBP	C.S.I.R.	5.59	955	280	189	1.48	1.2	11	36-43	330	No	No	178
115 V/60 Hz. (COMMERCIAL BACK PRESSURE)																
AZ 0349Y-1	115	60	CBP	R.S.I.R.	2.95	601	176	125	1.41	1.5	15	No	No	No	No	168
AZ 0370Y-1	115	60	CBP	R.S.I.R.	3.28	652	191	140	1.36	1.9	17	No	No	No	No	168
AZ 0387Y-1	115	60	CBP	R.S.I.R.	4.00	850	249	174	1.43	2.4	22	No	No	No	No	172
208-230 V/60 Hz. (COMMERCIAL BACK PRESSURE)																
AZ 0387Y-2	208-230	60	CBP	R.S.I.R.	4.00	846	248	178	1.39	1.3	14	No	No	No	No	172
220 V/50-60 Hz. (COMMERCIAL BACK PRESSURE)																
AZ 0370Y-6	220	50	CBP	R.S.I.R.	3.28	583	171	124	1.38	1.0	10	No	No	No	No	168
	220	60	CBP	R.S.I.R.	3.28	669	196	139	1.41	0.9	10	No	No	No	No	168
AZ 0411Y-6	220	50	CBP	R.S.I.R.	5.59	972	285	215	1.33	1.7	18	No	No	No	No	178
	220	60	CBP	R.S.I.R.	5.59	1,109	325	233	1.39	1.5	17	No	No	No	No	178
AZ 9411Y-6	220	50	CBP	C.S.I.R.	5.59	972	285	215	1.33	1.7	9	36-43	330	No	No	178
	220	60	CBP	C.S.I.R.	5.59	1,109	325	233	1.39	1.5	9	36-43	330	No	No	178
220-240 V/50 Hz. (HIGH BACK PRESSURE)																
AZ 3414Y	220-240	50	HBP	R.S.I.R.	4.00	1,280	375	190	1.97	1.2	10	No	No	No	No	172
115 V/60 Hz. (HIGH BACK PRESSURE)																
AZ 3414Y-1	115	60	HBP	R.S.I.R.	4.00	1,518	445	230	1.93	2.9	20	No	No	No	No	178
208-230 V/60 Hz. (HIGH BACK PRESSURE)																
AZ 3414Y-2	208-230	60	HBP	R.S.I.R.	4.00	1,518	445	235	1.89	1.6	12	No	No	No	No	172
100 V/50-60 Hz. (HIGH BACK PRESSURE)																
AZ 3414Y-3	100	50	HBP	R.S.I.R.	4.00	1,314	385	193	1.99	2.9	22	No	No	No	No	178
	100	60	HBP	R.S.I.R.	4.00	1,515	444	230	1.93	3.0	20	No	No	No	No	178
AZ 3414Y-3	100	50	HBP	R.S.C.R.	4.00	1,341	393	185	2.12	2.2	16	No	No	25	440	178
	100	60	HBP	R.S.C.R.	4.00	1,563	458	217	2.11	2.3	14	No	No	25	440	178
110 V/60 Hz. (HIGH BACK PRESSURE)																
AZ 3414Y-4	110	60	HBP	R.S.I.R.	4.00	1,518	445	230	1.93	2.9	20	No	No	No	No	178
AZ SERIES																**R 404A/R 507**
220-240 V/50 Hz. (LOW BACK PRESSURE)																
AZ 2360Z	220-240	50	LBP	C.S.I.R	3.59	540	158	150	1.06	1.0	6	36-43	330	No	No	178
AZ 2370Z	220-240	50	LBP	C.S.I.R	4.00	631	185	166	1.10	1.0	6	36-43	330	No	No	178

AZ/AZA Compressor

General Dimensions (mm.)

AZ

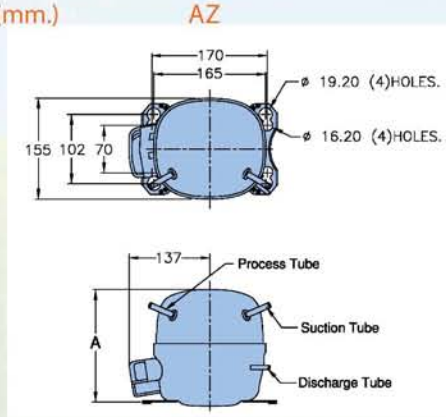

AZA

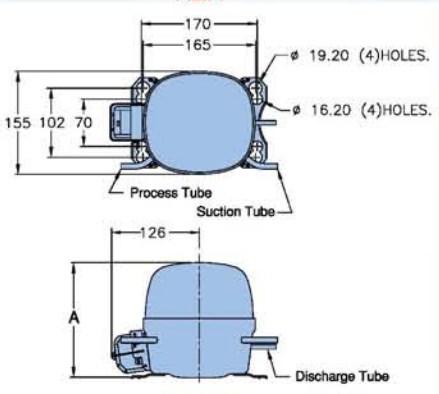

AZA *Series*

Model	Voltage	Hz.	App.	Motor Type	Disp. (CC)	Cooling (BTU/Hr)	Cooling (W)	Input (W)	COP W/O Run	COP W/Run	RLA (A)	LRA (A)	Start CAP. MFD	Start CAP. VAC.	Run CAP. MFD	Run CAP. VAC.	Dim. "A"
AZ A SERIES															R 134a		
220-240 V/50 Hz. (LOW BACK PRESSURE)																	
AZ A1320YK	220-240	50	LBP	R.S.I.R.	2.50	199	58	57	1.02	1.12	0.4	6	No	No	4	440	159
AZ A1327YK	220-240	50	LBP	R.S.I.R.	3.28	252	74	73	1.01	1.23	0.5	7	No	No	4	440	159
AZ A1330YK	220-240	50	LBP	R.S.I.R.	3.59	290	85	79	1.08	1.26	0.5	8	No	No	4	440	159
AZ A1335YK	220-240	50	LBP	R.S.I.R.	3.80	328	96	82	1.17	1.28	0.6	3	No	No	4	440	168
AZ A1340YK	220-240	50	LBP	R.S.I.R.	4.00	375	110	92	1.20	1.34	0.7	5	No	No	4	440	172
AZ A1350YK	220-240	50	LBP	R.S.I.R.	5.00	457	134	109	1.23	1.33	0.8	6	No	No	4	440	180
AZ A1360YK	220-240	50	LBP	R.S.I.R.	5.59	495	145	107	1.23	1.36	0.5	7	No	No	4	440	180
AZ A1370YK	220-240	50	LBP	R.S.I.R.	6.00	563	165	137	1.20	1.37	1.0	9	No	No	4	440	180
115 V/60 Hz. (LOW BACK PRESSURE)																	
AZ A1360YK-1	115	60	LBP	R.S.I.R.	5.59	631	185	155	1.19	-	2.7	26	No	No	No	No	178
AZ A2360YK-1	115	60	LBP	C.S.I.R.	5.59	631	185	155	1.19	-	2.7	18	108-130	250	No	No	178
208-230 V/60 Hz. (LOW BACK PRESSURE)																	
AZ A1327YK-2	208-230	60	LBP	R.S.I.R.	3.28	314	92	86	1.07	-	0.7	9	No	No	No	No	162
AZ A1330YK-2	208-230	60	LBP	R.S.I.R.	3.59	314	92	85	1.08	-	0.7	9	No	No	No	No	168
AZ A1335YK-2	208-230	60	LBP	R.S.I.R.	3.80	392	115	104	1.11	-	0.8	8	No	No	4	440	168
AZ A1340YK-2	208-230	60	LBP	R.S.I.R.	4.00	437	128	112	1.14	-	0.9	10	No	No	No	No	172
AZ A1360YK-2	208-230	60	LBP	R.S.I.R.	5.59	618	181	148	1.22	-	1.1	14	No	No	No	No	172
110 V/60 Hz. (LOW BACK PRESSURE)																	
AZ A1320YK-4	110	60	LBP	R.S.I.R.	2.86	273	80	79	1.01	-	1.2	11	No	No	No	No	168
AZ A1330YK-4	110	60	LBP	R.S.I.R.	3.59	314	92	85	1.08	-	1.2	13	No	No	No	No	168
AZ A1335YK-4	110	60	LBP	R.S.I.R.	3.80	392	115	104	1.11	-	1.8	16	No	No	No	No	168
AZ A1340YK-4	110	60	LBP	R.S.I.R.	4.00	437	128	112	1.14	-	1.7	15	No	No	No	No	172
AZ A1360YK-4	110	60	LBP	R.S.I.R.	5.59	614	180	155	1.16	-	2.7	26	No	No	No	No	178
AZ A2360YK-4	110	60	LBP	C.S.I.R.	5.59	631	185	155	1.19	-	2.7	18	108-130	250	No	No	178
127 V/60 Hz. (LOW BACK PRESSURE)																	
AZ A1335YK-5	127	60	LBP	R.S.I.R.	3.80	392	115	104	1.11	-	1.4	14	No	No	No	No	168
220-240 V/50 Hz. (COMMERCIAL BACK PRESSURE)																	
AZ A0413YK	220-240	50	CBP	R.S.I.R.	6.00	1,146	336	213	1.58	-	1.5	14	No	No	No	No	178
AZA9413Y	220-240	50	CBP	C.S.I.R.	6.00	1,160	340	213	1.60	-	1.6	9	36-43	330	No	No	178
115 V/60 Hz. (COMMERCIAL BACK PRESSURE)																	
AZ A0413YK-1	115	60	CBP	R.S.I.R.	6.00	1,361	399	255	1.56	-	3.2	29	No	No	No	No	178
AZ A9413Y-1	115	60	CBP	C.S.I.R.	6.00	1,310	384	260	1.48	-	3.6	20	36-43	250	No	No	178
208-230 V/60 Hz. (COMMERCIAL BACK PRESSURE)																	
AZ A0413YK-2	208-230	60	CBP	R.S.I.R.	6.00	1,331	390	265	1.47	-	1.8	18	No	No	No	No	178
AZ A9413YK-2	208-230	60	CBP	C.S.I.R.	6.00	1,366	400	265	1.51	-	2.0	12	36-43	330	No	No	178
100 V/50-60 Hz. (COMMERCIAL BACK PRESSURE)																	
AZ A0413YK-3	100	50	CBP	R.S.I.R.	6.00	1,143	335	240	1.40	-	4.3	26	No	No	No	No	178
	100	60	CBP	R.S.I.R.	6.00	1,331	390	256	1.52	-	3.7	24	No	No	No	No	178
AZ A SERIES															R 600a		
220-240 V/50 Hz. (LOW BACK PRESSURE)																	
AZ A1320M	220-240	50	LBP	R.S.C.R.	3.80	188	55	48	-	1.14	0.2	6	No	No	4	440	159
AZ A1327M	220-240	50	LBP	R.S.C.R.	4.00	205	60	52	-	1.15	0.3	9	No	No	4	440	159
AZ A1330M	220-240	50	LBP	R.S.C.R.	5.00	238	70	59	-	1.18	0.3	8	No	No	4	440	159
AZ A1335M	220-240	50	LBP	R.S.I.R.	5.59	290	85	67	1.13	1.27	0.3	6	No	No	4	440	168
AZ A1340M	220-240	50	LBP	R.S.C.R.	6.00	307	90	71	-	1.27	0.3	7	No	No	4	440	172
115 V/60 Hz. (LOW BACK PRESSURE)																	
AZ A1320M-1	115	60	LBP	R.S.I.R.	3.80	222	65	64	1.02	-	1.1	11	No	No	No	No	159
AZ A1327M-1	115	60	LBP	R.S.I.R.	4.00	238	70	68	1.02	-	1.3	16	No	No	No	No	159
AZ A1330M-1	115	60	LBP	R.S.I.R.	5.00	290	85	80	1.06	-	1.3	12	No	No	No	No	159

Allowable Positions For Shipping After Compressor Assembly

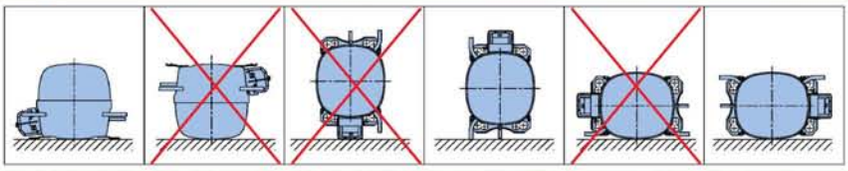

AE *Series*

Model	Voltage	Hz.	App.	Motor Type	Disp. (CC)	Cooling (BTU/Hr)	Cooling (W)	Input (W)	COP W/W	RLA (A)	LRA (A)	Start CAP. MFD	Start CAP. VAC.	Run CAP. MFD	Run CAP. VAC.	Dim. "A"
AE SERIES														R 134a		
220-240 V/50 Hz. (LOW BACK PRESSURE)																
AE 1360Y	220-240	50	LBP	R.S.I.R.	6.91	539	158	140	1.13	1.0	10	No	No	No	No	189
	220-240	50	LBP	R.S.C.R.	6.91	570	167	127	1.31	0.6	4	No	No	4	440	189
AE 1370Y	220-240	50	LBP	R.S.I.R.	8.12	635	186	160	1.16	1.2	13	No	No	No	No	189
	220-240	50	LBP	R.S.C.R.	8.12	682	200	152	1.32	0.8	10	No	No	6	440	189
AE 1390Y	220-240	50	LBP	R.S.I.R.	9.42	860	252	192	1.31	1.3	14	No	No	No	No	202
	220-240	50	LBP	R.S.C.R.	9.42	904	265	192	1.38	0.9	10	No	No	4	440	189
AE 1411Y	220-240	50	LBP	R.S.I.R.	14.14	1,017	298	252	1.18	2.0	22	No	No	No	No	214
AE 2340Y	220-240	50	LBP	C.S.I.R.	5.11	375	110	107	1.03	0.8	6	36-43	330	No	No	189
AE 2360Y	220-240	50	LBP	C.S.I.R.	6.91	539	158	136	1.16	1.0	7	36-43	330	No	No	189
	220-240	50	LBP	C.S.R.	6.91	539	158	119	1.33	0.5	5	36-43	330	5	440	189
AE 2370Y	220-240	50	LBP	C.S.I.R.	8.12	631	185	163	1.13	1.2	7	36-43	330	No	No	189
	220-240	50	LBP	C.S.R.	8.12	631	185	143	1.29	0.7	7	36-43	330	5	440	189
AE 2390Y	220-240	50	LBP	C.S.I.R.	9.42	809	237	205	1.16	1.4	9	36-43	330	No	No	202
	220-240	50	LBP	C.S.R.	9.42	819	240	178	1.35	0.9	7	36-43	330	5	440	202
AEA 2410Y	220-240	50	LBP	C.S.I.R.	12.05	921	270	226	1.19	2.0	12	36-43	330	No	No	214
AEA 2413Y	220-240	50	LBP	C.S.I.R.	14.14	1,126	330	280	1.18	2.0	13	36-43	330	No	No	214
AEA 2415Y	220-240	50	LBP	C.S.R.	16.08	1,262	370	280	1.32	1.3	12	36-43	330	8	450	214
AE 2417Y	220-240	50	LBP	C.S.R.	18.00	1,365	400	325	1.23	1.7	16	36-43	330	10	440	214
115 V/60 Hz. (LOW BACK PRESSURE)																
AE 1350Y-1	115	60	LBP	R.S.I.R.	5.99	546	160	148	1.08	2.2	23	No	No	No	No	181
AE 1360Y-1	115	60	LBP	R.S.I.R.	6.91	645	189	170	1.11	2.4	22	No	No	No	No	189
208-230 V/60 Hz. (LOW BACK PRESSURE)																
AE 1360Y-2	208-230	60	LBP	R.S.I.R.	6.91	648	190	162	1.17	1.1	12	No	No	No	No	189
AE 1370Y-2	208-230	60	LBP	R.S.I.R.	8.12	717	210	184	1.14	1.3	17	No	No	No	No	189
AE 1390Y-2	208-230	60	LBP	R.S.I.R.	9.42	955	280	235	1.19	1.7	18	No	No	No	No	202
AE 2370Y-2	208-230	60	LBP	C.S.R.	8.12	751	220	170	1.29	0.8	8	36-43	330	5	440	189
AE 2390Y-2	208-230	60	LBP	C.S.I.R.	9.42	955	280	236	1.19	1.7	13	36-43	330	No	No	202
AE 2410Y-2	208-230	60	LBP	C.S.I.R.	14.14	1,065	312	307	1.02	2.5	16	36-43	330	No	No	214
AE 2413Y-2	208-230	60	LBP	C.S.R.	16.08	1,269	372	349	1.07	1.8	19	36-43	330	8	450	214
100 V/50-60 Hz. (LOW BACK PRESSURE)																
AE 2360Y-3	100	50	LBP	C.S.R.	6.91	597	175	155	1.13	2.0	17	36-43	250	15	440	189
	100	60	LBP	C.S.R.	6.91	682	200	183	1.09	1.9	15	36-43	250	15	440	189
AE 2370Y-3	100	50	LBP	C.S.R.	8.12	710	208	180	1.16	2.2	17	36-43	250	15	440	189
	100	60	LBP	C.S.R.	8.12	809	237	216	1.10	2.2	15	36-43	250	15	440	189
AE 2390Y-3	100	50	LBP	C.S.R.	9.42	819	240	196	1.22	2.7	27	108-130	250	15	440	189
	100	60	LBP	C.S.R.	9.42	955	280	230	1.22	2.5	23	108-130	250	15	440	189
110 V/60 Hz. (LOW BACK PRESSURE)																
AE 1327Y-4	110	60	LBP	R.S.I.R.	3.90	276	81	89	0.91	1.3	16	No	No	No	No	172
AE 1330Y-4	110	60	LBP	R.S.I.R.	4.08	317	93	95	0.98	1.6	16	No	No	No	No	172
AE 1340Y-4	110	60	LBP	R.S.I.R.	5.11	450	132	126	1.05	1.8	17	No	No	No	No	189
AE 2411Y-4	110	60	LBP	C.S.R.	14.14	1,109	325	275	1.18	2.8	28	108-130	250	15	440	214
127 V/60 Hz. (LOW BACK PRESSURE)																
AE 1350Y-5	127	60	LBP	R.S.I.R.	5.99	546	160	148	1.08	2.0	16	No	No	No	No	189
220 V/50-60 Hz. (LOW BACK PRESSURE)																
AE 1390Y-6	220	50	LBP	R.S.I.R.	9.42	870	255	203	1.26	1.6	17	No	No	No	No	202
	220	60	LBP	R.S.I.R.	9.42	1,013	297	236	1.26	1.5	15	No	No	No	No	202
220-240 V/50 Hz. (COMMERCIAL BACK PRESSURE)																
AE 0412Y	220-240	50	CBP	R.S.I.R.	5.99	1,075	315	201	1.57	1.5	14	No	No	No	No	189
	220-240	50	HBP	R.S.I.R.	5.99	1,955	573	259	2.21	1.7	14	No	No	No	No	189
AE 9437Y	220-240	50	CBP	C.S.R.	18.00	3,139	920	532	1.73	2.6	16	36-43	330	10	440	214
	220-240	50	HBP	C.S.R.	18.00	5,732	1,680	730	2.30	3.5	16	36-43	330	10	440	214
110 V/60 Hz. (COMMERCIAL BACK PRESSURE)																
AE 0412Y-4	110	60	CBP	R.S.I.R.	5.99	1,300	381	237	1.61	3.0	22	No	No	No	No	189
	110	60	HBP	R.S.I.R.	5.99	2,334	684	314	2.18	3.6	22	No	No	No	No	189
208-230 V/60 Hz. (COMMERCIAL BACK PRESSURE)																
AE 0412Y-2	208-230	60	CBP	R.S.I.R.	5.99	1,259	369	229	1.61	1.4	13	No	No	No	No	189
	208-230	60	HBP	R.S.I.R.	5.99	2,283	669	307	2.18	1.7	13	No	No	No	No	189
AE 9423Y-2	208-230	60	CBP	C.S.R.	12.05	2,327	682	396	1.72	1.9	13	36-43	330	8	450	202
	208-230	60	HBP	C.S.R.	12.05	4,333	1,270	560	2.27	2.6	13	36-43	330	8	450	202
AE 9437Y-2	208-230	60	CBP	C.S.R.	18.00	3,429	1,005	635	1.58	3.0	17	36-43	330	10	440	214
	208-230	60	HBP	C.S.R.	18.00	6,653	1,950	870	2.24	4.2	17	36-43	330	10	440	214

AE *Series*

Model	Voltage	Hz.	App.	Motor Type	Disp. (CC)	Cooling (BTU/Hr)	Cooling (W)	Input (W)	COP W/W	RLA (A)	LRA (A)	Start CAP. MFD	Start CAP. VAC.	Run CAP. MFD	Run CAP. VAC.	Dim. "A"
AE SERIES														R 134a		
220-240 V/50 Hz. (MEDIUM BACK PRESSURE)																
AE 6412Y	220-240	50	MBP	R.S.I.R.	5.99	1,061	311	193	1.61	1.2	12	No	No	No	No	189
AE 7415Y	220-240	50	MBP	C.S.I.R.	7.55	1,259	369	250	1.48	1.8	12	36-43	330	No	No	189
AE 7423Y	220-240	50	MBP	C.S.I.R.	12.05	1,958	574	361	1.59	2.3	19	36-43	330	No	No	202
AE 7426Y	220-240	50	MBP	C.S.I.R.	14.14	2,184	640	425	1.51	2.5	13	36-43	330	No	No	214
AE 7430Y	220-240	50	MBP	C.S.R.	16.08	2,542	745	455	1.64	2.2	13	36-43	330	8	450	214
208-230 V/60 Hz. (MEDIUM BACK PRESSURE)																
AE 7423Y-2	208-230	60	MBP	C.S.I.R.	12.05	2,286	670	438	1.53	12.6	3	36-43	330	No	No	202
AE 7425Y-2	208-230	60	MBP	C.S.I.R.	14.14	2,525	740	497	1.49	19.5	3	36-43	330	No	No	214
AE 7430Y-2	208-230	60	MBP	C.S.R.	16.08	2,955	866	530	1.63	2.6	17	36-43	330	8	450	214
110 V/60 Hz. (MEDIUM BACK PRESSURE)																
AE 7423Y-4	110	60	MBP	C.S.I.R.	12.05	2,286	670	435	1.54	5.1	25	120	250	No	No	202
220-240 V/50 Hz. (HIGH BACK PRESSURE)																
AE 3414Y	220-240	50	HBP	R.S.I.R.	4.49	1,262	370	223	1.66	1.3	8	No	No	No	No	172
AE 3417Y	220-240	50	HBP	R.S.I.R.	5.68	1,706	500	245	2.04	1.6	12	No	No	No	No	189
AE 3425Y	220-240	50	HBP	R.S.I.R.	7.55	2,491	730	342	2.13	2.2	14	No	No	No	No	189
AE 3430Y	220-240	50	HBP	R.S.I.R.	8.86	2,900	850	395	2.15	2.5	22	No	No	No	No	189
AE 3435Y	220-240	50	HBP	R.S.I.R.	9.42	3,044	892	427	2.09	2.7	21	No	No	No	No	189
AE 3440Y	220-240	50	HBP	R.S.I.R.	12.05	3,634	1,065	511	2.08	3.0	11	No	No	No	No	202
AE 3448Y	220-240	50	HBP	R.S.I.R.	14.14	4,094	1,200	595	2.02	3.5	29	No	No	No	No	214
AE 4414Y	220-240	50	HBP	C.S.I.R.	4.49	1,262	370	223	1.66	1.3	5	36-43	330	No	No	181
AE 4425Y	220-240	50	HBP	C.S.I.R.	7.55	2,388	700	327	2.14	2.2	11	36-43	330	No	No	189
AE 4430Y	220-240	50	HBP	C.S.I.R.	8.86	2,798	820	390	2.10	2.5	12	36-43	330	No	No	189
	220-240	50	HBP	C.S.R.	8.86	2,716	796	339	2.35	1.6	10	36-43	330	8	450	189
AE 4435Y	220-240	50	HBP	C.S.I.R.	9.42	3,078	902	440	2.05	2.7	14	36-43	330	No	No	189
AE 4440Y	220-240	50	HBP	C.S.I.R.	12.05	3,668	1,075	505	2.13	3.1	15	36-43	330	No	No	202
	220-240	50	HBP	C.S.R.	12.05	3,668	1,075	456	2.36	2.2	11	36-43	330	8	450	202
AE 4448Y	220-240	50	HBP	C.S.I.R.	14.14	4,060	1,190	575	2.07	3.5	24	36-43	330	No	No	214
	220-240	50	HBP	C.S.R.	14.14	4,163	1,220	520	2.35	2.4	12	36-43	330	12	440	214
AE 4459Y	220-240	50	HBP	C.S.R.	16.08	4,947	1,450	660	2.20	3.0	16	36-43	330	15	440	214
115 V/60 Hz. (HIGH BACK PRESSURE)																
AE 3425Y-1	115	60	HBP	R.S.I.R.	7.55	2,736	802	401	2.00	4.3	23	No	No	No	No	189
AE 4425Y-1	115	60	HBP	C.S.I.R.	7.55	2,798	820	419	1.96	5.5	24	108-130	250	No	No	189
AE 4430Y-1	115	60	HBP	C.S.R.	8.86	3,293	965	432	2.23	3.9	23	108-130	250	30	440	189
AE 4440Y-1	115	60	HBP	C.S.R.	12.05	4,006	1,174	591	1.99	6.2	35	108-130	250	20	440	202
AE 4448Y-1	115	60	HBP	C.S.R.	14.14	4,968	1,456	682	2.13	6.7	42	108-130	250	20	440	214
208-230 V/60 Hz. (HIGH BACK PRESSURE)																
AE 3414Y-2	208-230	60	HBP	R.S.I.R.	4.49	1,570	460	253	1.82	1.7	16	No	No	No	No	181
AE 3417Y-2	208-230	60	HBP	R.S.I.R.	5.68	1,945	570	295	1.93	1.7	12	No	No	No	No	189
AE 3425Y-2	208-230	60	HBP	R.S.I.R.	7.57	2,764	810	392	2.07	2.3	13	No	No	No	No	189
AE 3430Y-2	208-230	60	HBP	R.S.I.R.	8.86	3,207	940	461	2.04	2.8	19	No	No	No	No	201
AE 4425Y-2	208-230	60	HBP	C.S.I.R.	7.55	2,753	807	390	2.07	2.3	13	36-43	330	No	No	189
AE 4430Y-2	208-230	60	HBP	C.S.I.R.	8.86	3,207	940	475	1.98	2.8	16	36-43	330	No	No	201
	208-230	60	HBP	C.S.R.	8.86	3,320	973	436	2.23	2.0	15	36-43	330	8	450	189
AE 4440Y-2	208-230	60	HBP	C.S.I.R.	12.05	4,197	1,230	610	2.02	3.5	15	36-43	330	No	No	202
	208-230	60	HBP	C.S.R.	12.05	4,333	1,270	560	2.27	2.6	13	36-43	330	8	450	202
AE 4448Y-2	208-230	60	HBP	C.S.R.	14.14	4,784	1,402	627	2.24	3.0	16	36-43	330	10	440	214
AE 4459Y-2	208-230	60	HBP	C.S.R.	16.08	5,613	1,645	774	2.13	3.6	18	36-43	330	15	440	214
100 V/50-60 Hz. (HIGH BACK PRESSURE)																
AE 4425Y-3	100	50	HBP	C.S.I.R.	7.57	2,395	702	356	1.97	5.8	26	108-130	250	No	No	189
	100	60	HBP	C.S.I.R.	7.57	2,832	830	393	2.11	5.2	24	108-130	250	No	No	189
AE 4430Y-3	100	50	HBP	C.S.I.R.	8.86	2,798	820	412	1.99	6.0	26	108-130	250	No	No	189
	100	60	HBP	C.S.I.R.	8.86	3,207	940	475	1.98	5.9	24	108-130	250	No	No	189
AE 4440Y-3	100	50	HBP	C.S.I.R.	12.05	3,670	1,075	560	1.92	8.0	37	130-156	330	No	No	202
	100	60	HBP	C.S.I.R.	12.05	4,250	1,245	620	2.01	7.7	37	130-156	330	No	No	202
AE 4448Y-3	100	50	HBP	C.S.R.	14.14	4,367	1,280	570	2.25	6.4	24	130-156	330	35	440	214
	100	60	HBP	C.S.R.	14.14.	4,879	1,430	695	2.06	7.0	23	130-156	330	35	440	214
110 V/60 Hz. (HIGH BACK PRESSURE)																
AE 3414Y-4	110	60	HBP	R.S.I.R.	4.49	1,597	468	246	1.90	2.8	17	No	No	No	No	172
AE 4425Y-4	110	60	HBP	C.S.I.R.	7.55	2,791	818	410	2.00	5.3	24	108-130	250	No	No	189
AE 4430Y-4	110	60	HBP	C.S.I.R.	8.86	3,272	959	490	1.96	5.9	30	108-130	250	No	No	189
	110	60	HBP	C.S.R.	8.86	3,293	965	432	2.23	3.9	23	108-130	250	30	440	189
AE 4440Y-4	110	60	HBP	C.S.R.	12.05	4,333	1,270	560	2.27	5.1	14	108-130	250	30	440	202
AE 4448Y-4	110	60	HBP	C.S.R.	14.14	4,947	1,450	652	2.22	6.5	32	108-130	250	20	440	214
220 V/50-60 Hz. (HIGH BACK PRESSURE)																
AE 3425Y-6	220	50	HBP	R.S.I.R.	7.57	2,423	710	343	2.07	2.5	18	No	No	No	No	189
	220	60	HBP	R.S.I.R.	7.57	2,849	835	396	2.11	2.4	17	No	No	No	No	189
AE 4430Y-6	220	50	HBP	C.S.R.	8.86	2,716	796	339	2.35	1.6	10	36-43	330	8	450	189
	220	60	HBP	C.S.R.	8.86	3,276	960	416	2.31	1.9	10	36-43	330	8	450	189
AE 4440Y-6	220	50	HBP	C.S.R.	12.05	3,668	1,075	456	2.36	2.2	11	36-43	330	8	450	202
	220	60	HBP	C.S.R.	12.05	4,357	1,277	550	2.32	2.5	11	36-43	330	8	450	202

AE *Series*

Model	Voltage	Hz.	App.	Motor Type	Disp. (CC)	Cooling (BTU/Hr)	Cooling (W)	Input (W)	COP W/W	RLA (A)	LRA (A)	Start CAP. MFD	Start CAP. VAC.	Run CAP. MFD	Run CAP. VAC.	Dim. "A"
AE SERIES														R 22		
220-240 V/50 Hz. (COMMERCIAL BACK PRESSURE)																
AE 9422EK	220-240	50	MBP	C.S.I.R.	7.57	2,030	595	417	1.43	2.3	15	36-43	330	No	No	189
220-240 V/50 Hz. (MEDIUM BACK PRESSURE)																
AE 6412EK	220-240	50	MBP	R.S.I.R.	4.49	989	290	240	1.21	1.4	11	No	No	No	No	189
AE 7415EK	220-240	50	MBP	C.S.I.R.	5.48	1,262	370	310	1.19	2.1	12	36-43	250	No	No	189
AE 7422EK	220-240	50	MBP	C.S.I.R.	7.55	1,877	550	420	1.31	2.4	12	36-43	330	No	No	189
AE 7426EK	220-240	50	MBP	C.S.I.R.	8.85	2,184	640	480	1.33	2.7	13	36-43	330	No	No	201
AE 7435EK	220-240	50	MBP	C.S.R.	12.04	2,968	870	550	1.58	2.5	13	36-43	330	8	440	214
AE 7440EK	220-240	50	MBP	C.S.R.	14.14	3,446	1,010	660	1.53	3.0	13	36-43	330	12	440	214
AE 7445EK	220-240	50	MBP	C.S.R.	16.08	3,798	1,113	801	1.39	3.7	16	36-43	330	15	440	214
208-230 V/60 Hz. (MEDIUM BACK PRESSURE)																
AE 7415EK-2	208-230	60	MBP	C.S.I.R.	5.48	1,467	430	360	1.19	2.4	13	36-43	330	No	No	189
AE 7422EK-2	208-230	60	MBP	C.S.I.R.	7.57	2,238	656	490	1.34	2.9	16	36-43	330	No	No	189
AE 7426EK-2	208-230	60	MBP	C.S.I.R.	8.85	2,678	785	577	1.36	3.3	16	36-43	330	No	No	201
AE 7435EK-2	208-230	60	MBP	C.S.R.	12.04	3,361	985	689	1.43	3.3	16	36-43	330	8	450	214
AE 7440EK-2	208-230	60	MBP	C.S.R.	14.14	4,002	1,173	793	1.48	3.6	17	36-43	330	15	440	214
110 V/60 Hz. (MEDIUM BACK PRESSURE)																
AE 6412EK-4	110	60	MBP	R.S.I.R.	4.49	1,280	375	300	1.25	3.7	23	No	No	No	No	189
AE 7415EK-4	110	60	MBP	C.S.I.R.	5.48	1,484	435	408	1.07	5.1	33	108-130	250	No	No	189
AE 7422EK-4	110	60	MBP	C.S.I.R.	7.55	2,228	653	502	1.30	6.1	30	108-130	250	No	No	189
	110	60	MBP	C.S.R.	7.55	2,252	660	475	1.39	5.2	26	108-130	250	10	440	189
AE 7426EK-4	110	60	MBP	C.S.R.	8.85	2,784	816	550	1.48	5.3	32	108-130	250	20	440	201
220-240 V/50 Hz. (HIGH BACK PRESSURE)																
AE 3422EK	220-240	50	HBP	R.S.I.R.	4.49	1,887	553	321	1.72	2.2	9	No	No	No	No	189
AE 4422EK	220-240	50	HBP	C.S.I.R.	4.49	1,924	564	357	1.58	2.2	9	36-43	330	No	No	189
AE 4430EK	220-240	50	HBP	C.S.R.	6.92	2,907	852	467	1.82	2.3	15	36-43	330	8	450	202
AE 4440EK	220-240	50	HBP	C.S.R.	7.57	3,412	1,000	453	2.21	2.2	13	36-43	330	8	450	214
AE 4448EK	220-240	50	HBP	C.S.R.	8.85	3,999	1,172	560	2.09	2.7	13	36-43	330	8	450	202
AE 4474EK	220-240	50	HBP	C.S.R.	14.14	6,142	1,800	840	2.14	4.0	19	36-43	330	15	440	214
AE 5448EK	220-240	50	HBP	C.S.R.	8.85	3,999	1,172	560	2.09	2.7	13	36-43	330	8	450	202
208-230 V/60 Hz. (HIGH BACK PRESSURE)																
AE 4430EK-2	208-230	60	HBP	C.S.R.	6.92	3,207	940	585	1.61	2.9	16	36-43	330	8	450	202
AE 4440EK-2	208-230	60	HBP	C.S.R.	7.55	4,094	1,200	568	2.11	2.8	17	36-43	330	8	450	202
AE 4448EK-2	208-230	60	HBP	C.S.R.	8.86	4,606	1,350	725	1.86	3.5	16	36-43	330	8	450	202
AE 4474EK-2	208-230	60	HBP	C.S.R.	14.14	7,387	2,165	1,070	2.02	5.1	21	36-43	330	15	440	214
AE 5462EK-2	208-230	60	HBP	P.S.C.	14.14	7,387	2,165	1,070	2.02	5.1	21	No	No	15	440	214
110 V/60 Hz. (HIGH BACK PRESSURE)																
AE 3422EK-4	110	60	HBP	R.S.I.R.	4.49	2,201	645	400	1.61	5.0	31	No	No	No	No	189
AE 4430EK-4	110	60	HBP	C.S.R.	6.92	3,276	960	600	1.60	5.5	33	108-130	250	20	440	202
AE 4440EK-4	110	60	HBP	C.S.R.	7.55	4,248	1,245	595	2.09	6.4	34	108-130	250	15	440	202
AE 4448EK-4	110	60	HBP	C.S.R.	8.85	4,999	1,465	727	2.02	7.0	37	108-130	250	20	440	202
AE SERIES														R 404A/R 507		
220-240 V/50 Hz. (LOW BACK PRESSURE)																
AE 2410ZK	220-240	50	LBP	C.S.I.R.	5.99	921	270	239	1.13	1.5	9	36-43	330	No	No	189
	220-240	50	LBP	C.S.R.	5.99	969	284	213	1.33	1.0	11	36-43	330	5	440	189
AE 2413ZK	220-240	50	LBP	C.S.I.R.	6.91	1,109	325	284	1.14	2.0	11	36-43	330	No	No	189
AE 2416ZK	220-240	50	LBP	C.S.I.R.	8.86	1,399	410	352	1.16	2.3	13	36-43	330	No	No	202
	220-240	50	LBP	C.S.R.	8.86	1,399	410	303	1.35	1.4	12	36-43	330	8	440	189
AE 2420ZK	220-240	50	LBP	C.S.R.	12.05	1,699	498	370	1.35	1.8	11	36-43	330	8	440	202
AE 2425ZK	220-240	50	LBP	C.S.R.	14.14	2,092	613	488	1.26	2.7	16	36-43	330	8	450	214
AE 2428ZK	220-240	50	LBP	C.S.R.	16.08	2,388	700	560	1.25	2.9	16	36-43	330	8	450	214
AE 2432ZK	220-240	50	LBP	C.S.R.	18.00	2,640	774	660	1.17	3.3	21	36-43	330	15	440	214

AE *Series*

Model	Voltage	Hz.	App.	Motor Type	Disp. (CC)	Cooling (BTU/Hr)	Cooling (W)	Input (W)	COP W/W	RLA (A)	LRA (A)	Start CAP. MFD	Start CAP. VAC.	Run CAP. MFD	Run CAP. VAC.	Dim. "A"
AE SERIES														R 404A/R 507		
208-230 V/60 Hz. (LOW BACK PRESSURE)																
AE 2410ZK-2	208-230	60	LBP	C.S.I.R.	5.99	1,153	338	278	1.22	1.9	14	36-43	330	No	No	189
	208-230	60	LBP	C.S.R.	5.99	1,153	338	262	1.29	1.3	12	36-43	330	4	440	189
AE 2413ZK-2	208-230	60	LBP	C.S.I.R.	6.91	1,307	383	323	1.19	1.2	12	36-43	330	No	No	189
	208-230	60	LBP	C.S.R.	6.91	1,331	390	300	1.30	1.5	12	36-43	330	4	440	189
AE 2416ZK-2	208-230	60	LBP	C.S.R.	8.12	1,580	463	348	1.33	1.7	16	36-43	330	5	440	189
AE 2420ZK-2	208-230	60	LBP	C.S.R.	12.05	1,962	575	475	1.21	2.2	17	36-43	330	10	440	214
AE 2425ZK-2	208-230	60	LBP	C.S.R.	14.14	2,286	670	546	1.23	2.6	27	36-43	330	12	440	214
AE 2428ZK-2	208-230	60	LBP	C.S.R.	16.08	2,730	800	656	1.22	3.2	20	36-43	330	12	440	214
100 V/50-60 Hz. (LOW BACK PRESSURE)																
AE 2410ZK-3	100	50	LBP	C.S.I.R.	5.99	969	284	280	1.01	5.0	27	108-130	250	No	No	189
	100	60	LBP	C.S.I.R.	5.99	1,136	333	295	1.13	4.2	23	108-130	250	No	No	189
AE 2413ZK-3	100	50	LBP	C.S.I.R.	6.91	1,109	325	358	0.91	6.1	27	108-130	250	No	No	189
	100	60	LBP	C.S.I.R.	6.91	1,314	385	360	1.07	5.0	24	108-130	250	No	No	189
AE SERIES														R 407C		
220-240 V/50 Hz. (MEDIUM BACK PRESSURE)																
AE 7445GK	220-240	50	MBP	C.S.R.	16.08	3,798	1,113	801	1.39	4.0	16	36-43	330	15	440	214
AE 7457GK	220-240	50	MBP	C.S.R.	18.00	4,367	1,280	880	1.45	4.3	21	36-43	330	15	440	214
220-240 V/50 Hz. (HIGH BACK PRESSURE)																
AE 5462GK	220-240	50	HBP	P.S.C.	14.14	5,906	1,731	804	2.15	3.8	18	No	No	15	440	214
208-230 V/60 Hz. (HIGH BACK PRESSURE)																
AE 5462GK-2	208-230	60	HBP	P.S.C.	14.14	7,097	2,080	970	2.14	4.5	24	No	No	15	440	214

AE Compressor

General Dimensions (mm.)

AE-1

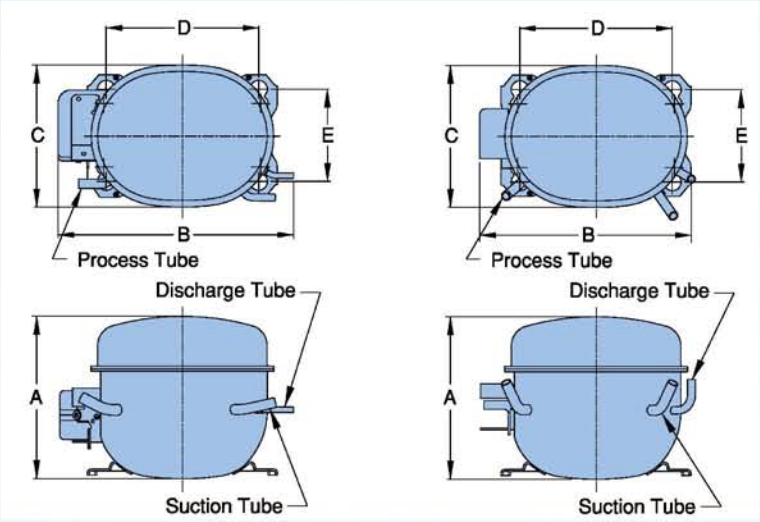

AE-2

Allowable Positions For Shipping After Compressor Assembly

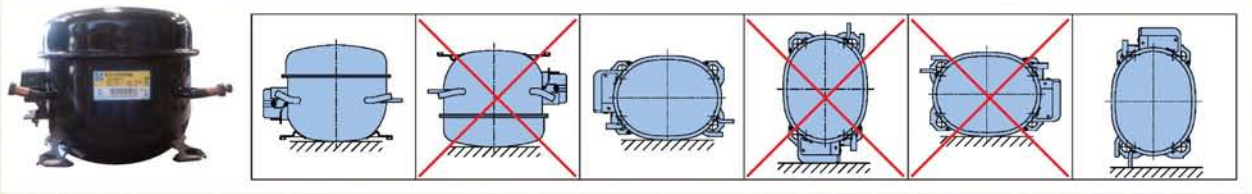

BA *Series*

Model	Voltage	Hz.	App.	Motor Type	Disp. (CC)	Cooling (BTU/Hr)	Cooling (W)	Input (W)	COP W/W	RLA (A)	LRA (A)	Start CAP. MFD	Start CAP. VAC.	Run CAP. MFD	Run CAP. VAC.	Dim. "A"
BA SERIES																**R 134a**
220-240 V/50 Hz. (LOW BACK PRESSURE)																
BA 1360Y	220-240	50	LBP	R.S.I.R.	5.99	546	160	120	1.33	0.9	10	No	No	No	No	193
	220-240	50	LBP	R.S.C.R.	5.99	546	160	110	1.45	0.9	10	No	No	4	440	193
BA1370Y	220-240	50	LBP	R.S.I.R.	6.91	672	197	147	1.34	1.1	12	No	No	No	No	193
	220-240	50	LBP	R.S.C.R.	6.91	679	199	138	1,44	1.1	12	No	No	4	440	193
BA 1390Y	220-240	50	LBP	R.S.I.R.	8.11	819	240	174	1.38	1.2	12	No	No	No	No	193
	220-240	50	LBP	R.S.C.R.	8.11	826	242	163	1.48	1.2	12	No	No	4	440	193
BA 1410Y	220-240	50	LBP	R.S.I.R.	9.42	945	277	208	1.33	1.6	20	No	No	No	No	205
	220-240	50	LBP	R.S.C.R.	9.42	938	275	190	1.45	1.6	20	No	No	4	440	205
BA 2413Y	220-240	50	LBP	C.S.I.R.	10.90	1,110	325	253	1.28	1.8	10	36-43	330	No	No	193
BA SERIES																**R 404A/R 507**
220-240 V/50 Hz. (MEDIUM BACK PRESSURE)																
BA 7430Z	220-240	50	MBP	C.S.R.	8.85	2,577	755	495	1.53	2.5	17	36-43	330	8	440	205
BA 7440Z	220-240	50	MBP	C.S.R.	12.05	3,300	967	616	1.57	2.0	18	36-43	330	15	440	215
BA 7443Z	220-240	50	MBP	C.S.R.	14.14	3,900	1,143	770	1.48	3.7	19	36-43	330	20	440	215
BA 7452Z	220-240	50	MBP	C.S.R.	16.08	4,500	1,319	895	1.47	4.6	25	36-43	330	15	440	215
BA 7459Z	220-240	50	MBP	C.S.R.	18.00	4,947	1,450	1,030	1.41	5.0	25	36-43	330	20	440	215
208-230 V/60 Hz. (MEDIUM BACK PRESSURE)																
BA 7440Z-2	208-230	60	MBP	C.S.R.	12.05	3,850	1,128	732	1.54	3.7	29	36-43	330	12	440	215
BA 7443Z-2	208-230	60	MBP	C.S.R.	14.14	4,290	1,257	880	1.43	4.4	27	36-43	330	15	440	215
BA SERIES																**R 600a**
220-240 V/50 Hz. (LOW BACK PRESSURE)																
BA 1340M	220-240	50	LBP	R.S.C.R.	6.91	382	112	78	1.43	0.4	7	No	No	4	440	193
BA 1350M	220-240	50	LBP	R.S.C.R.	8.11	450	132	90	1.46	0.4	7	No	No	5	450	193
BA 1360M	220-240	50	LBP	R.S.C.R.	9.42	545	160	109	1.46	0.5	9	No	No	4	440	193
100V/50-60 Hz. (LOW BACK PRESSURE)																
BA 1350M-3	100	50	LBP	R.S.I.R.	8.11	444	130	102	1.27	1.8	14	No	No	No	No	193
	100	60	LBP	R.S.I.R.	8.11	512	150	115	1.30	1.7	13	No	No	No	No	193

BA Compressor

General Dimensions (mm.)

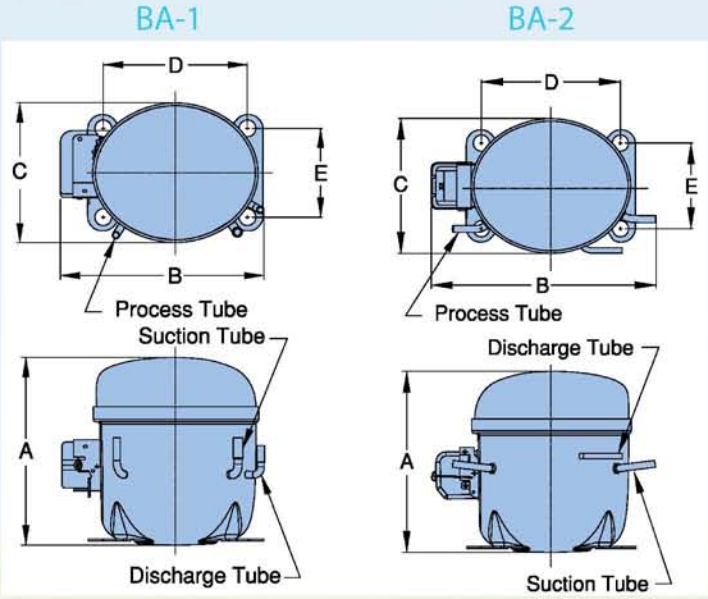

Allowable Positions For Shipping After Compressor Assembly

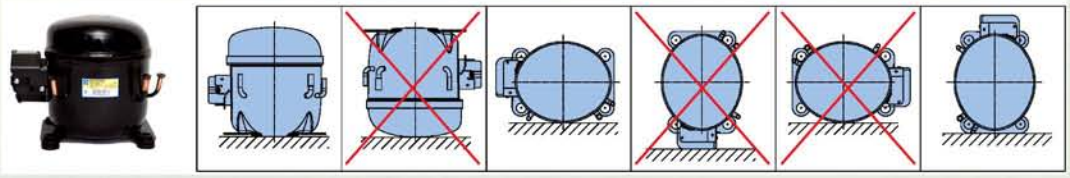

CA *Series*

Model	Voltage	Hz.	App.	Motor Type	Disp. (CC)	Cooling (BTU/Hr)	Cooling (W)	Input (W)	COP W/W	RLA (A)	LRA (A)	Start CAP. MFD	Start CAP. VAC.	Run CAP. MFD	Run CAP. VAC.	Dim. "A"
CA SERIES														R 134a		
220-240 V/50 Hz. (COMMERCIAL BACK PRESSURE)																
CA 9437Y	220-240	50	CBP	C.S.R.	18.00	3,140	920	510	1.80	2.5	16	36-43	330	10	440	215
CA 9440Y	220-240	50	CBP	C.S.R.	20.00	3,410	1,000	590	1.70	2.9	16	43-52	330	10	440	215
CA 9445Y	220-240	50	CBP	C.S.R.	22.00	3,750	1,100	665	1.65	3.5	21	43-52	330	15	440	215
220-240 V/50 Hz. (MEDIUM BACK PRESSURE)																
CA 7440Y	220-240	50	MBP	C.S.R.	20.00	3,410	1,000	590	1.70	2.9	16	43-52	330	10	440	215
CA 7445Y	220-240	50	MBP	C.S.R.	22.00	3,750	1,100	665	1.65	3.5	21	43-52	330	15	440	215
220-240 V/50 Hz. (HIGH BACK PRESSURE)																
CA 4474Y	220-240	50	HBP	C.S.R.	20.00	6,240	1,830	795	2.30	3.9	16	43-52	330	10	440	215
CA 4482Y	220-240	50	HBP	C.S.R.	22.00	6,820	2,000	930	2.30	3.5	21	43-52	330	15	440	215
208-230 V/60 Hz. (COMMERCIAL BACK PRESSURE)																
CA 9440Y-2	208-230	60	CBP	C.S.R.	20.00	3,900	1,145	700	1.63	3.3	20	43-52	330	10	440	215
CA 9445Y-2	208-230	60	CBP	C.S.R.	22.00	4,210	1,235	775	1.59	3.4	20	43-52	330	15	440	215
CA SERIES														R 404A/R 507		
220-240 V/50 Hz. (LOW BACK PRESSURE)																
CA 2435Z	220-240	50	LBP	C.S.R.	20.00	3,150	925	740	1.25	4.2	21	43-52	330	15	440	215
208-230 V/60 Hz. (LOW BACK PRESSURE)																
CA 2435Z-2	208-230	60	LBP	C.S.R.	20.00	3,394	995	917	1.08	4.1	28	43-52	330	20	440	215

CA Compressor

General Dimensions (mm.)

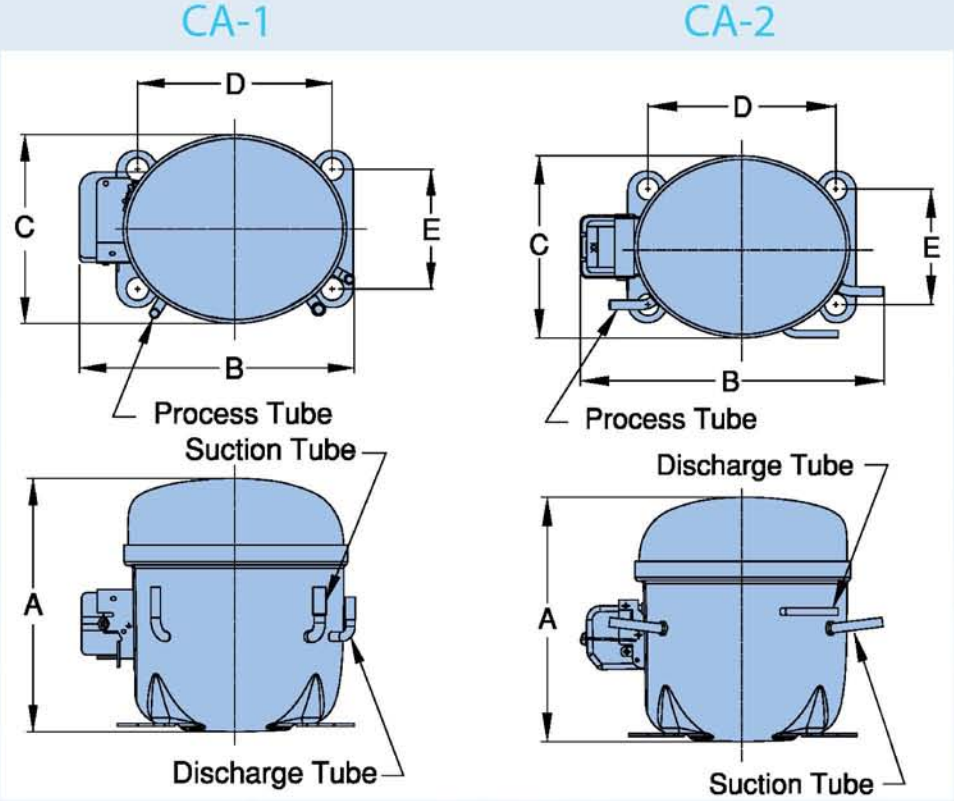

Allowable Positions For Shipping After Compressor Assembly

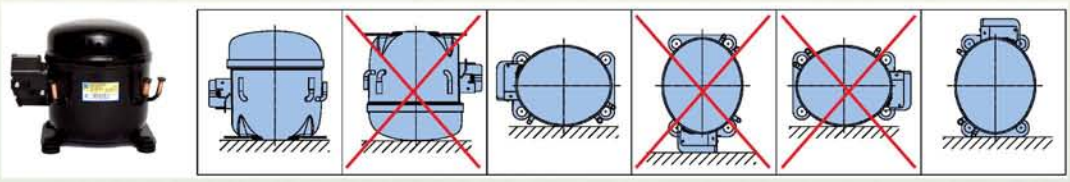

WJ *Series*

Model	Voltage	Hz.	App.	Motor Type	Disp. (CC)	Cooling (BTU/Hr)	Cooling (W)	Input (W)	EER.	RLA (A)	LRA (A)	Start CAP. MFD	Start CAP. VAC.	Run CAP. MFD	Run CAP. VAC.	Dim. "A"
WJ SERIES																**R 134a**
220-240 V/50 Hz. (COMMERCIAL BACK PRESSURE)																
WJ 9430YK	220-240	50	CBP	C.S.R.	19.80	3,000	879	490	6.12	2.1	19	88-106	330	15	440	264
WJ 9440YK	220-240	50	CBP	C.S.R.	21.55	3,490	1,023	560	6.23	2.6	19	88-106	330	15	440	264
WJ 9445YK	220-240	50	CBP	C.S.R.	24.20	3,990	1,169	640	6.23	2.9	19	88-106	330	20	440	264
WJ 9450YK	220-240	50	CBP	C.S.R.	26.75	4,590	1,345	790	5.81	4.8	30	88-106	330	15	440	264
WJ 9460YK	220-240	50	CBP	C.S.R.	30.50	5,390	1,580	870	6.20	4.2	30	88-106	330	15	440	264
WJ 9470YK	220-240	50	CBP	C.S.R.	34.50	5,840	1,712	975	5.99	4.2	30	88-106	330	15	440	264
115 V/60 Hz. (COMMERCIAL BACK PRESSURE)																
WJ 9440YK-1	115	60	CBP	C.S.R.	21.55	4,025	1,180	685	5.88	6.5	47	216-259	250	25	440	264
WJ 9445YK-1	115	60	CBP	C.S.R.	24.20	4,710	1,380	810	5.81	7.6	52	216-259	250	30	440	264
WJ 9460YK-1	115	60	CBP	C.S.R.	30.50	6,250	1,832	1,090	5.73	9.7	61	216-259	250	30	440	264
208-230 V/60 Hz. (COMMERCIAL BACK PRESSURE)																
WJ 9440YK-2	208-230	60	CBP	C.S.R.	21.55	3,950	1,158	680	5.81	3.2	19	88-106	330	20	440	264
WJ 9445YK-2	208-230	60	CBP	C.S.R.	24.20	4,660	1,366	767	6.08	3.5	37	108-130	330	20	440	264
WJ 9460YK-2	208-230	60	CBP	C.S.R.	30.50	6,140	1,800	1,025	5.99	4.7	32	108-130	330	15	440	264
WJ SERIES																**R 22**
220-240 V/50 Hz. (COMMERCIAL BACK PRESSURE)																
WJ 9460EK	220-240	50	CBP	C.S.R.	19.80	5,080	1,489	855	5.94	4.6	28	88-106	330	15	440	264
WJ 9470EK	220-240	50	CBP	C.S.R.	21.55	5,800	1,700	958	6.05	4.6	30	88-106	330	20	440	264
WJ 9480EK	220-240	50	CBP	C.S.R.	24.20	6,480	1,899	1,100	5.89	5.3	28	88-106	330	25	440	264
WJ 9485EK	220-240	50	CBP	C.S.R.	26.70	7,300	2,140	1,246	5.86	5.7	38	145-174	330	25	440	264
WJ 9510EK	220-240	50	CBP	C.S.R.	30.50	8,390	2,459	1,425	5.89	6.5	40	145-174	330	25	440	264
220-240 V/50 Hz. (HIGH BACK PRESSURE)																
WJ 4518EK	220-240	50	HBP	C.S.R.	30.50	15,090	4,423	1,780	8.48	8.6	43	88-106	330	25	440	264
WJ 5510EK	220-240	50	HBP	P.S.C.	19.80	9,170	2,688	1,094	8.38	5.5	28	No	No	15	440	264
WJ 5513EK	220-240	50	HBP	P.S.C.	21.50	10,790	3,162	1,218	8.86	5.6	30	No	No	20	440	264
WJ 5515EK	220-240	50	HBP	P.S.C.	24.20	12,000	3,517	1,360	8.82	6.4	28	No	No	25	440	264
WJ 5516EK	220-240	50	HBP	P.S.C.	26.75	13,390	3,924	1,550	8.64	6.9	38	No	No	25	440	264
WJ 5518EK	220-240	50	HBP	P.S.C.	30.50	15,090	4,423	1,780	8.48	8.6	43	No	No	25	440	264
208-230 V/60 Hz. (HIGH BACK PRESSURE)																
WJ 5510EK-2	208-230	60	HBP	P.S.C.	19.80	11,560	3,388	1,380	8.38	7.1	37	No	No	15	440	264
WJ 5513EK-2	208-230	60	HBP	P.S.C.	21.50	13,000	3,810	1,485	8.75	6.5	32	No	No	25	440	264
WJ 5515EK-2	208-230	60	HBP	P.S.C.	24.20	14,390	4,217	1,717	8.38	8.1	38	No	No	25	440	264
WJ 5516EK-2	208-230	60	HBP	P.S.C.	26.75	16,100	4,719	1,925	8.36	8.8	44	No	No	25	440	264
WJ 5518EK-2	208-230	60	HBP	P.S.C.	30.50	18,690	5,478	2,230	8.38	10.0	53	No	No	30	440	264
WJ SERIES																**R 407C**
220-240 V/50 Hz. (COMMERCIAL BACK PRESSURE)																
WJ 9460GK	220-240	50	CBP	C.S.R.	19.80	5,080	1,489	855	5.94	4.6	28	88-106	330	15	440	264
WJ 9470GK	220-240	50	CBP	C.S.R.	21.55	5,800	1,700	958	6.05	4.6	30	88-106	330	20	440	264
WJ 9480GK	220-240	50	CBP	C.S.R.	24.20	6,480	1,899	1,100	5.89	5.3	28	88-106	330	25	440	264
WJ 9485GK	220-240	50	CBP	C.S.R.	26.70	7,300	2,140	1,246	5.86	5.7	38	145-175	330	25	440	264
WJ 9510GK	220-240	50	CBP	C.S.R.	30.50	8,390	2,459	1,425	5.89	6.5	40	145-174	330	25	440	264
WJ SERIES																**R 404A**
220-240 V/50 Hz. (LOW BACK PRESSURE)																
WJ 2430ZK	220-240	50	LBP	C.S.R.	19.80	2,390	700	550	4.35	2.6	30	108-130	330	20	440	264
WJ 2435ZK	220-240	50	LBP	C.S.R.	21.50	2,900	850	637	4.55	2.7	30	108-130	330	20	440	264
WJ 2440ZK	220-240	50	LBP	C.S.R.	24.20	3,290	964	731	4.50	3.3	30	145-174	330	25	440	264
WJ 2450ZK	220-240	50	LBP	C.S.R.	26.75	3,800	1,114	865	4.39	4.5	34	145-174	330	25	440	264
WJ 2455ZK	220-240	50	LBP	C.S.R.	30.50	4,700	1,377	1,050	4.48	4.9	35	145-174	330	25	440	264
220-240 V/50 Hz. (COMMERCIAL BACK PRESSURE)																
WJ 9470Z	220-240	50	MBP	C.S.R.	21.50	6,180	1,811	1,050	5.88	4.9	23	88-106	330	25	425	264
	220-240	50	HBP	C.S.R.	21.50	10,850	3,180	1,358	7.99	6.4	23	88-106	330	25	425	264
WJ 9485Z	220-240	50	MBP	C.S.R.	24.20	7,440	2,181	1,260	5.90	6.2	31	88-106	330	25	425	264
	220-240	50	HBP	C.S.R.	24.20	12,930	3,790	1,630	7.93	7.8	31	88-106	330	25	425	264
WJ 9490Z	220-240	50	MBP	C.S.R.	26.70	8,000	2,345	1,400	5.72	7.0	33	108-130	330	20	440	264
	220-240	50	HBP	C.S.R.	26.70	13,600	3,986	1,833	7.42	9.0	33	108-130	330	20	440	264
WJ 9510Z	220-240	50	MBP	C.S.R.	30.50	9,200	2,696	1,690	5.44	9.0	47	108-130	330	25	425	264
	220-240	50	HBP	C.S.R.	30.50	16,000	4,689	2,130	7.51	11.0	47	108-130	330	25	425	264
WJ 9513Z	220-240	50	MBP	C.S.R.	34.50	11,000	3,224	1,964	5.60	9.2	50	108-130	330	25	425	264
	220-240	50	HBP	C.S.R.	34.50	19,100	5,598	2,510	7.60	11.5	50	108-130	330	25	425	264
115 V/60 Hz. (LOW BACK PRESSURE)																
WJ 2435Z-1	115	60	LBP	C.S.R.	21.50	2,900	850	747	3.89	10.0	71	189-227	250	20	440	264
WJ 2450Z-1	115	60	LBP	C.S.R.	26.75	4,330	1,269	1,035	4.18	9.6	97	243-292	250	40	440	264
WJ 2455Z-1	115	60	LBP	C.S.R.	30.50	5,400	1,583	1,275	4.24	13.1	123	243-292	250	40	440	264
208-230 V/60 Hz. (LOW BACK PRESSURE)																
WJ 2440Z-2	208-230	60	LBP	C.S.R.	24.20	3,910	1,146	970	4.03	5.2	43	108-130	330	20	440	264
WJ 2450Z-2	208-230	60	LBP	C.S.R.	26.75	4,400	1,290	1,080	4.07	5.0	44	108-130	330	25	425	264
WJ 2455Z-2	208-230	60	LBP	C.S.R.	30.50	5,430	1,591	1,275	4.25	5.9	47	145-174	330	30	440	264

AW *Series*

Model	Voltage	Hz.	App.	Motor Type	Disp. (CC)	Cooling (BTU/Hr)	Cooling (W)	Input (W)	EER.	RLA (A)	LRA (A)	Start CAP. MFD	Start CAP. VAC.	Run CAP. MFD	Run CAP. VAC.	Dim. "A"
AW SERIES																R 134a
220-240 V/50 Hz. (MEDIUM BACK PRESSURE)																
AW 4495YK	220-240	50	MBP	C.S.R.	30.50	3,580	1,049	680	5.26	3.5	33	88-106	330	20	370/440	289
AW 4513YK	220-240	50	MBP	C.S.R.	35.60	4,570	1,339	742	6.16	3.9	50	88-106	330	30	370/440	289
AW 4514YK	220-240	50	MBP	C.S.R.	37.50	4,770	1,398	745	6.40	3.9	54	88-106	330	35	370/440	324
AW 4515YK	220-240	50	MBP	C.S.R.	39.60	5,350	1,568	847	6.32	4.2	54	88-106	330	35	370/440	324
AW 4517YK	220-240	50	MBP	C.S.R.	48.40	7,330	2,148	1,050	6.98	4.9	35	108-130	330	20	370/440	324
220-240 V/50 Hz. (HIGH BACK PRESSURE)																
AW 4495YK	220-240	50	HBP	C.S.R.	30.50	8,120	2,380	851	9.54	4.4	33	88-106	330	20	370/440	289
AW 4513YK	220-240	50	HBP	C.S.R.	35.60	10,540	3,089	1,051	10.03	5.2	50	88-106	330	30	370/440	289
AW 4514YK	220-240	50	HBP	C.S.R.	37.50	11,370	3,332	1,104	10.30	5.4	54	88-106	330	35	370/440	324
AW 4515YK	220-240	50	HBP	C.S.R.	39.60	12,030	3,526	1,190	10.11	5.7	54	88-106	330	35	370/440	324
AW 4517YK	220-240	50	HBP	C.S.R.	48.40	14,660	4,297	1,487	9.86	6.8	35	108-130	330	20	370/440	324
208-230 V/60 Hz. (HIGH BACK PRESSURE)																
AW 4495YK-2	208-230	60	HBP	C.S.R.	30.50	9,980	2,925	1,075	9.28	5.2	47	130-156	330	30	370/440	289
AW 4513YK-2	208-230	60	HBP	C.S.R.	35.60	12,420	3,640	1,304	9.52	6.0	73	108-130	330	35	370/440	289
AW 4517YK-2	208-230	60	HBP	C.S.R.	48.40	17,060	5,000	1,760	9.69	8.0	73	130-156	330	35	370/440	324
AW SERIES																R 22
220-240 V/50 Hz. (HIGH BACK PRESSURE)																
AW 4515EK	220-240	50	HBP	C.S.R.	30.50	13,930	4,083	1,390	10.02	6.5	33	108-130	330	25	370/440	289
AW 4517EK	220-240	50	HBP	C.S.R.	32.70	15,140	4,437	1,536	9.86	7.6	50	108-130	330	30	370/440	289
AW 4519EK	220-240	50	HBP	C.S.R.	35.60	16,490	4,833	1,688	9.77	8.3	50	108-130	330	25	370/440	289
AW 4520EK	220-240	50	HBP	C.S.R.	37.50	17,740	5,199	1,738	10.21	8.0	54	108-130	330	35	370/440	324
AW 4522EK	220-240	50	HBP	C.S.R.	39.60	19,330	5,665	1,895	10.20	8.7	54	108-130	330	35	370/440	324
AW 4524EK	220-240	50	HBP	C.S.R.	43.10	20,950	6,140	2,089	10.03	9.6	51	108-130	330	45	370/440	324
AW 4528EK	220-240	50	HBP	C.S.R.	48.40	24,250	7,107	2,415	10.04	11.8	67	130-165	330	35	370/440	324
AW 4530EK	220-240	50	HBP	C.S.R.	50.60	25,000	7,327	2,498	10.01	12.0	73	88-106	330	50	370/440	324
AW 4532EK	220-240	50	HBP	C.S.R.	53.50	26,850	7,869	2,678	10.03	12.9	73	130-156	330	50	370/440	324
AW 5513EK	220-240	50	HBP	P.S.C.	27.80	12,060	3,535	1,270	9.50	6.4	32	No	No	20	370/440	289
AW 5515EK	220-240	50	HBP	P.S.C.	30.50	13,930	4,083	1,390	10.02	6.5	33	No	No	25	370/440	289
AW 5517EK	220-240	50	HBP	P.S.C.	32.70	15,010	4,399	1,500	10.01	7.0	35	No	No	30	370/440	289
AW 5519EK	220-240	50	HBP	P.S.C.	35.60	16,490	4,833	1,688	9.77	8.3	50	No	No	30	370/440	289
AW 5520EK	220-240	50	HBP	P.S.C.	37.50	17,740	5,199	1,738	10.21	8.0	54	No	No	35	370/440	324
AW 5522EK	220-240	50	HBP	P.S.C.	39.60	19,330	5,665	1,895	10.20	8.7	54	No	No	35	370/440	324
AW 5524EK	220-240	50	HBP	P.S.C.	43.10	20,950	6,140	2,089	10.03	9.6	51	No	No	45	370/440	324
AW 5528EK	220-240	50	HBP	P.S.C.	48.40	24,250	7,107	2,415	10.04	11.8	67	No	No	35	370/440	324
AW 5530EK	220-240	50	HBP	P.S.C.	50.60	25,000	7,327	2,498	10.01	12.0	73	No	No	50	370/440	324
AW 5532EK	220-240	50	HBP	P.S.C.	53.50	26,850	7,869	2,678	10.03	12.9	73	No	No	50	370/440	324
AW 5535EK	220-240	50	HBP	P.S.C.	59.00	29,660	8,693	3,100	9.57	15.4	85	No	No	60	370/440	324
AW 5538EK	220-240	50	HBP	P.S.C.	63.00	31,500	9,232	3,100	10.16	15.0	85	108-130	330	60	370/440	324
208-230 V/60 Hz. (HIGH BACK PRESSURE)																
AW 4528EK-2	208-230	60	HBP	C.S.R.	48.40	27,800	8,148	2,780	10.00	12.9	73	130-156	330	35	370/440	324
AW 4532EK-2	208-230	60	HBP	C.S.R.	53.50	31,970	9,370	3,228	9.90	15.2	89	130-156	330	50	370/440	324
AW 5513EK-2	208-230	60	HBP	P.S.C.	27.80	14,750	4,323	1,470	10.03	6.8	40	No	No	25	370/440	289
AW 5515EK-2	208-230	60	HBP	P.S.C.	30.50	16,610	4,868	1,695	9.80	8.5	47	No	No	25	370/440	289
AW 5517EK-2	208-230	60	HBP	P.S.C.	32.70	18,220	5,340	1,850	9.85	8.4	47	No	No	30	370/440	289
AW 5519EK-2	208-230	60	HBP	P.S.C.	35.60	19,640	5,756	2,039	9.63	9.3	48	No	No	35	370/440	289
AW 5520EK-2	208-230	60	HBP	P.S.C.	37.50	20,400	5,979	2,030	10.05	9.5	52	No	No	35	370/440	324
AW 5522EK-2	208-230	60	HBP	P.S.C.	39.60	22,240	6,518	2,250	9.88	10.1	52	No	No	30	370/440	324
AW 5524EK-2	208-230	60	HBP	P.S.C.	43.10	24,220	7,098	2,420	10.01	12.0	76	No	No	40	370/440	324
AW 5528EK-2	208-230	60	HBP	P.S.C.	48.40	27,870	8,168	2,830	9.85	12.9	66	No	No	40	370/440	324
AW 5532EK-2	208-230	60	HBP	P.S.C.	53.50	31,970	9,370	3,228	9.90	15.2	89	No	No	50	370/440	324
AW 5530EK-2	208-230	60	HBP	P.S.C.	50.60	30,367	8,900	3,035	10.01	14.5	89	No	No	50	370/440	324
AW 5535EK-2	208-230	60	HBP	P.S.C.	59.00	34,800	10,199	3,640	9.56	17.0	90	No	No	60	370/440	324

AW Series

Model	Voltage	Hz.	App.	Motor Type	Disp. (CC)	Cooling (BTU/Hr)	Cooling (W)	Input (W)	EER.	RLA (A)	LRA (A)	Start CAP. MFD	Start CAP. VAC.	Run CAP. MFD	Run CAP. VAC.	Dim. "A"
AW SERIES																**R 22**
220 V/50-60 Hz. (HIGH BACK PRESSURE)																
AW 5515EK-6	220	50	HBP	P.S.C.	30.50	13,940	4,086	1,397	9.98	6.7	13	No	No	25	370/440	324
	220	60	HBP	P.S.C.	30.50	16,200	4,748	1,631	9.93	7.5	16	No	No	25	370/440	324
AW 5520EK-6	220	50	HBP	P.S.C.	37.50	17,810	5,220	1,807	9.86	9.4	59	No	No	35	370/440	324
	220	60	HBP	P.S.C.	37.50	20,400	5,979	2,030	10.05	9.5	52	No	No	35	370/440	324
AW 5522EK-6	220	50	HBP	P.S.C.	39.60	18,710	5,484	1,897	9.86	9.6	61	No	No	30	370/440	324
	220	60	HBP	P.S.C.	39.60	21,700	6,360	2,160	10.05	10.1	52	No	No	30	370/440	324
AW 5528EK-6	220	50	HBP	P.S.C.	48.40	23,810	6,978	2,370	10.05	11.8	70	No	No	35	370/440	324
	220	60	HBP	P.S.C.	48.40	28,130	8,244	2,807	10.02	12.9	65	No	No	35	370/440	324
AW 5530EK-6	220	50	HBP	P.S.C.	50.60	25,419	7,450	2,631	9.66	14.1	80	No	No	45	370/440	324
	220	60	HBP	P.S.C.	50.60	30,060	8,810	3,021	9.95	13.9	78	No	No	45	370/440	324
380-420 V/50 Hz, 460V/60Hz.-3PHASE (HIGH BACK PRESSURE)																
AW 5522E-9	380-420	50	HBP	3PHASE	39.60	17,550	5,144	1,700	10.32	2.8	24	No	No	No	No	324
	460	60	HBP	3PHASE	39.60	21,200	6,213	2,020	10.50	2.8	24	No	No	No	No	324
AW 5524E-9	380-420	50	HBP	3PHASE	43.10	19,795	5,802	1,918	10.32	3.4	24	No	No	No	No	324
	460	60	HBP	3PHASE	43.10	23,572	6,909	2,278	10.35	3.4	24	No	No	No	No	324
AW 5528E-9	380-420	50	HBP	3PHASE	48.40	23,203	6,800	2,230	10.40	3.9	31	No	No	No	No	324
	460	60	HBP	3PHASE	48.40	28,219	8,271	2,670	10.57	3.9	31	No	No	No	No	324
AW 5532E-9	380-420	50	HBP	3PHASE	53.50	25,385	7,440	2,520	10.07	4.4	31	No	No	No	No	324
	460	60	HBP	3PHASE	53.50	31,000	9,086	3,030	10.23	4.4	31	No	No	No	No	324
AW SERIES																**R 404A**
220-240 V/50 Hz. (LOW BACK PRESSURE)																
AW 2450ZK	220-240	50	LBP	C.S.R.	37.50	4,240	1,243	929	4.56	4.4	32	108-130	330	15	370/440	289
AW 2462ZK	220-240	50	LBP	C.S.R.	39.60	5,200	1,524	1,116	4.66	5.1	32	108-130	330	20	370	289
AW 2464ZK	220-240	50	LBP	C.S.R.	43.10	5,390	1,580	1,280	4.21	6.9	43	130-156	330	30	370/440	324
AW 2495ZK	220-240	50	LBP	C.S.R.	53.50	7,920	2,321	1,613	4.91	8.0	56	145-174	330	25	440	324
208-230 V/60 Hz. (LOW BACK PRESSURE)																
AW 2450ZK-2	208-230	60	LBP	C.S.R.	37.50	5,370	1,574	1,260	4.26	7.2	54	161-193	220/250	20	370/440	289
AW 2462ZK-2	208-230	60	LBP	C.S.R.	39.60	5,800	1,700	1,330	4.36	7.6	54	161-193	220/250	20	370/440	289
AW 2464ZK-2	208-230	60	LBP	C.S.R.	43.10	6,610	1,937	1,475	4.48	8.1	54	161-193	220/250	20	370/440	289
208-230 V/60 Hz. (MEDIUM BACK PRESSURE)																
AW 7512Z-2	208-230	60	MBP	C.S.R.	37.50	12,200	3,576	2,136	5.71	11.9	58	161-193	330	25	440	289
AW 7516Z-2	208-230	60	MBP	C.S.R.	53.50	15,960	4,678	2,520	6.33	11.5	65	161-193	330	40	440	324
220-240 V/50 Hz. (MEDIUM BACK PRESSURE)																
AW 7512Z	220-240	50	MBP	C.S.R.	37.50	9,900	2,902	1,687	5.87	8.4	42	130-156	330	30	440	289
AW 7514Z	220-240	50	MBP	C.S.R.	43.10	12,500	3,664	2,034	6.15	10.0	48	130-156	330	40	440	289
AW 7516Z	220-240	50	MBP	C.S.R.	53.50	19,100	5,598	3,008	6.35	15.0	52	130-156	330	40	440	324
380-420 V/50 Hz, 460V/60Hz.-3PHASE (LOW BACK PRESSURE)																
AW 2450Z-9	380-420	50	LBP	3PHASE	37.50	4,504	1,320	925	4.87	1.9	24	No	No	No	No	324
	460	60	LBP	3PHASE	37.50	4,879	1,430	1,025	4.76	1.8	24	No	No	No	No	324
AW 2464Z-9	380-420	50	LBP	3PHASE	43.10	5,541	1,624	1,140	4.86	2.1	24	No	No	No	No	324
	460	60	LBP	3PHASE	43.10	5,971	1,750	1,260	4.74	2.1	24	No	No	No	No	324
AW 2495Z-9	380-420	50	LBP	3PHASE	53.50	7,813	2,290	1,520	5.14	3.1	31	No	No	No	No	324
	460	60	LBP	3PHASE	53.50	8,291	2,430	1,680	4.94	3.1	31	No	No	No	No	324
AW 2510Z-9	380-420	50	LBP	3PHASE	59.00	8,564	2,510	1,690	5.07	3.1	35	No	No	No	No	324
	460	60	LBP	3PHASE	59.00	10,031	2,940	1,990	5.04	3.1	35	No	No	No	No	324
AW SERIES																**R 407C**
220-240 V/50 Hz. (MEDIUM BACK PRESSURE)																
AW 4515GK	220-240	50	MBP	C.S.R.	30.50	6,580	1,928	1,046	6.29	4.9	33	108-130	330	25	370/440	289
AW 4517GK	220-240	50	MBP	C.S.R.	32.70	6,990	2,049	1,196	5.84	6.3	50	108-130	330	30	370/440	289
AW 4519GK	220-240	50	MBP	C.S.R.	35.60	8,390	2,459	1,320	6.36	6.2	50	108-130	330	25	370/440	289
AW 4520GK	220-240	50	MBP	C.S.R.	37.50	9,010	2,641	1,349	6.68	6.2	54	108-130	330	35	370/440	324
AW 4522GK	220-240	50	MBP	C.S.R.	39.60	9,760	2,860	1,334	7.32	6.2	54	108-130	330	35	370/440	324
AW 4524GK	220-240	50	MBP	C.S.R.	43.10	10,630	3,115	1,685	6.31	7.8	51	108-130	330	45	370/440	324
AW 4528GK	220-240	50	MBP	C.S.R.	48.40	12,390	3,631	1,865	6.64	9.3	67	130-156	330	35	370/440	324
AW 4532GK	220-240	50	MBP	C.S.R.	53.50	13,810	4,047	2,103	6.57	10.2	73	130-156	330	50	370/440	324

AW *Series*

Model	Voltage	Hz.	App.	Motor Type	Disp. (CC)	Cooling (BTU/Hr)	Cooling (W)	Input (W)	EER.	RLA (A)	LRA (A)	Start CAP. MFD	Start CAP. VAC.	Run CAP. MFD	Run CAP. VAC.	Dim. "A"
AW SERIES																**R 407C**
208-230 V/60 Hz. (MEDIUM BACK PRESSURE)																
AW 4524GK-2	208-230	60	MBP	C.S.R.	43.10	12,500	3,664	1,948	6.42	10.0	76	108-130	330	35	370/440	324
AW 4528GK-2	208-230	60	MBP	C.S.R.	48.40	14,920	4,373	2,195	6.80	10.0	73	130-156	330	35	370/440	324
AW 4532GK-2	208-230	60	MBP	C.S.R.	53.50	16,660	4,883	2,594	6.42	12.4	89	130-156	330	50	370/440	324
208-230 V/60 Hz. (HIGH BACK PRESSURE)																
AW 4524GK-2	208-230	60	HBP	C.S.R.	43.10	24,220	7,098	2,420	10.01	12.0	76	108-130	330	35	370/440	324
AW 4528GK-2	208-230	60	HBP	C.S.R.	48.40	27,800	8,148	2,780	10.00	10.0	73	130-156	330	35	370/440	324
AW 4532GK-2	208-230	60	HBP	C.S.R.	53.50	31,970	9,370	3,228	9.90	15.2	89	130-156	330	50	370/440	324
AW 5519GK-2	208-230	60	HBP	P.S.C.	35.60	16,970	4,974	1,951	8.70	9.1	70	No	No	30	370/440	289
220-240 V/50 Hz. (HIGH BACK PRESSURE)																
AW 4515GK	220-240	50	HBP	C.S.R.	30.50	13,930	4,083	1,390	10.02	6.5	33	108-130	330	25	370/440	289
AW 4517GK	220-240	50	HBP	C.S.R.	32.70	15,140	4,437	1,536	9.86	7.6	50	108-130	330	30	370/440	289
AW 4519GK	220-240	50	HBP	C.S.R.	35.60	16,490	4,833	1,688	9.77	8.3	50	108-130	330	25	370/440	289
AW 4520GK	220-240	50	HBP	C.S.R.	37.50	17,740	5,199	1,738	10.21	8.0	54	108-130	330	35	370/440	324
AW 4522GK	220-240	50	HBP	C.S.R.	39.60	19,330	5,665	1,895	10.20	8.7	54	108-130	330	35	370/440	324
AW 4524GK	220-240	50	HBP	C.S.R.	43.10	20,950	6,140	2,089	10.23	9.6	51	108-130	330	45	370/440	324
AW 4528GK	220-240	50	HBP	C.S.R.	48.40	24,250	7,107	2,415	10.04	11.9	67	130-156	330	35	370/440	324
AW 4532GK	220-240	50	HBP	C.S.R.	53.50	26,850	7,869	2,678	10.03	12.9	73	130-156	330	50	370/440	324
AW 5513GK	220-240	50	HBP	P.S.C.	30.50	11,530	3,379	1,317	8.75	6.2	33	No	No	25	370/440	289
AW 5515GK	220-240	50	HBP	P.S.C.	32.70	12,960	3,798	1,483	8.74	7.4	50	No	No	30	370/440	289
AW 5517GK	220-240	50	HBP	P.S.C.	35.60	14,220	4,168	1,626	8.75	8.0	50	No	No	30	370/440	289
AW 5518GK	220-240	50	HBP	P.S.C.	37.50	15,440	4,525	1,646	9.38	7.6	54	No	No	35	370/440	324
AW 5519GK	220-240	50	HBP	P.S.C.	39.60	16,880	4,947	1,808	9.34	8.3	54	No	No	35	370/440	324
AW 5520GK	220-240	50	HBP	P.S.C.	43.10	17,940	5,258	1,983	9.05	9.1	51	No	No	45	370/440	324
AW 5525GK	220-240	50	HBP	P.S.C.	48.40	21,340	6,254	2,263	9.43	11.1	67	No	No	35	370/440	324
AW 5527GK	220-240	50	HBP	P.S.C.	50.60	22,510	6,597	2,403	9.37	11.5	73	No	No	50	370/440	324
AW SERIES																**R 410A**
220-240 V/50 Hz. (HIGH BACK PRESSURE)																
AW 5520B	220-240	50	HBP	P.S.C.	27.8	17,400	5,100	1,770	9.83	8.4	52	88-106	330	30	370/440	324
AW 5522B	220-240	50	HBP	P.S.C.	30.5	18,900	5,539	1,990	9.50	9.4	51	88-106	330	45	370/440	324
AW 5524B	220-240	50	HBP	P.S.C.	32.7	20,500	6,008	2,190	9.36	10.3	51	88-106	330	45	370/440	324
AW 5528B	220-240	50	HBP	P.S.C.	35.6	24,600	7,210	2,455	10.02	12.1	67	88-106	330	35	370/440	324
AW 5530B	220-240	50	HBP	P.S.C.	37.5	25,300	7,415	2,550	9.92	12.7	73	88-106	330	50	370/440	324
AW 5532B	220-240	50	HBP	P.S.C.	39.6	27,000	7,913	2,750	9.82	13.5	73	88-106	330	50	370/440	324
AW 5535B	220-240	50	HBP	P.S.C.	43.1	29,500	8,646	3,000	9.83	15.0	85	88-106	330	35	370/440	324
AW 5540B	220-240	50	HBP	P.S.C.	48.4	33,800	9,906	3,530	9.58	17.0	85	88-106	330	60	370/440	324
AW 5542B	220-240	50	HBP	P.S.C.	50.6	35,200	10,317	3,700	9.51	18.0	85	88-106	330	60	370/440	324

WJ Compressor

General Dimensions (mm.)

WJ-1 WJ-2 WJ-3 With Spud Adaptor

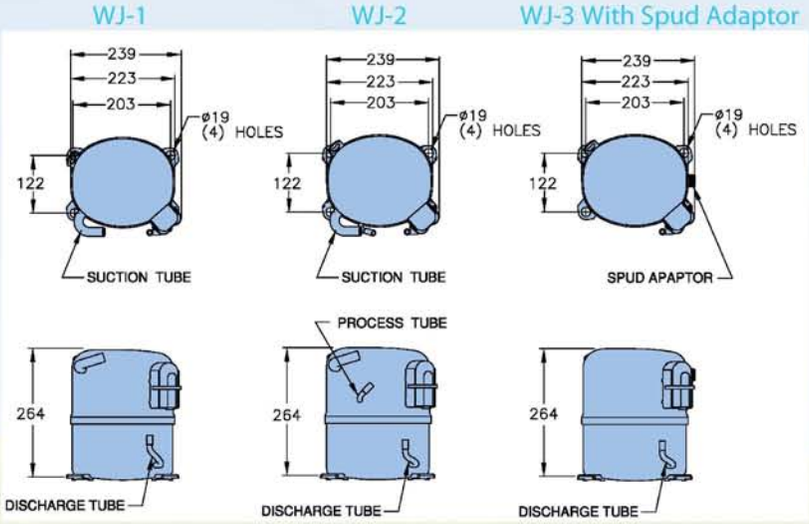

Allowable Positions For Shipping After Compressor Assembly

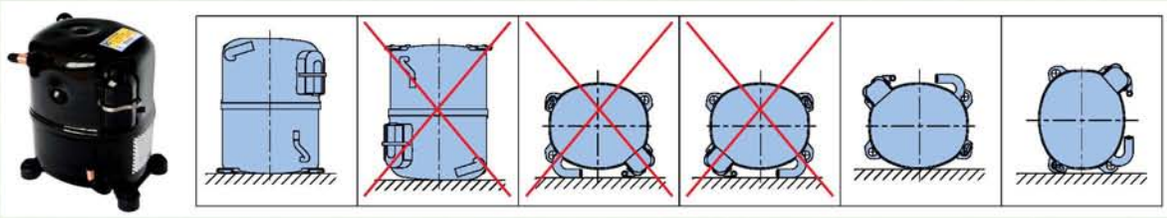

AW *Series*

AW Compressor

General Dimensions (mm.)

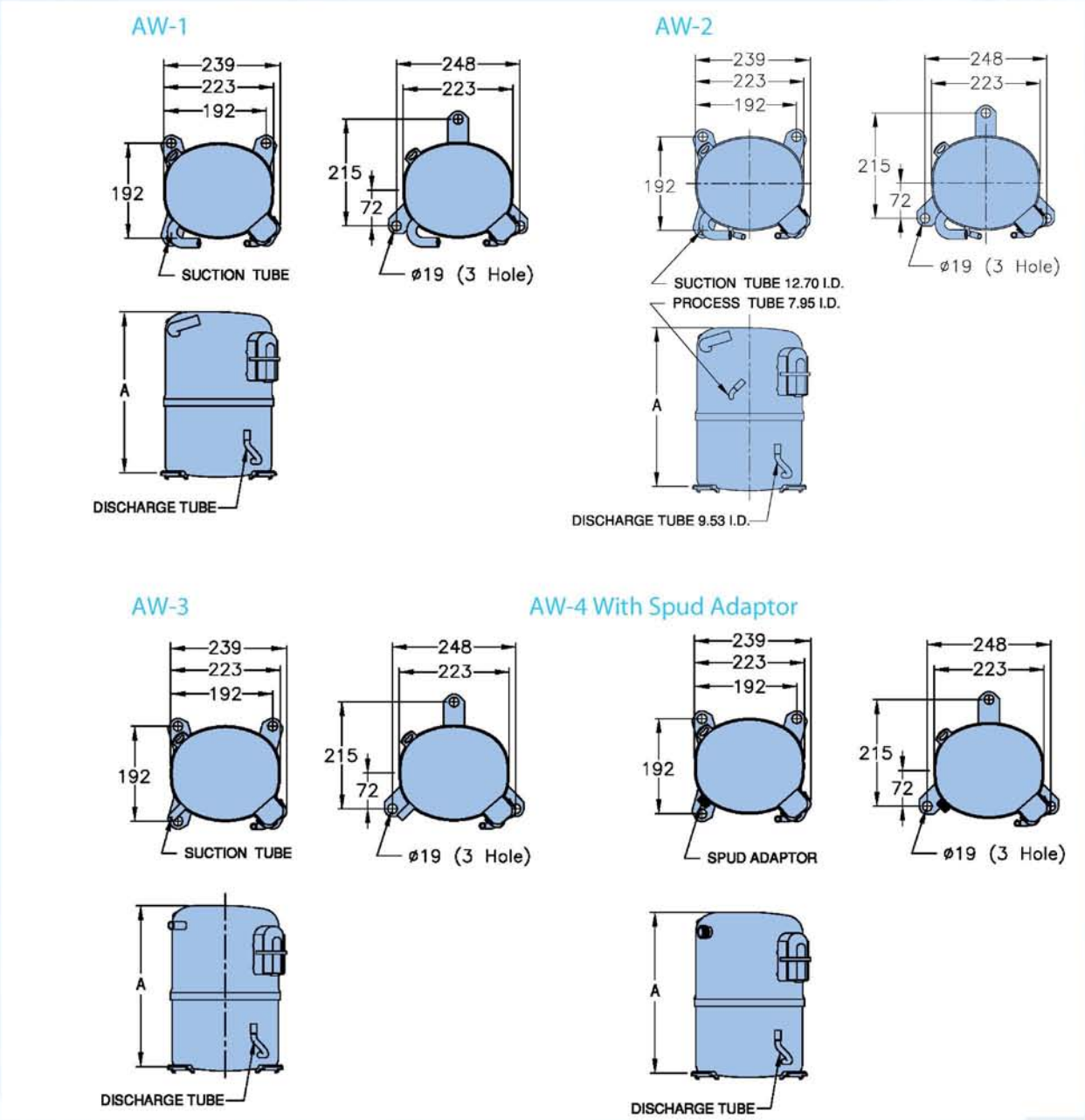

Allowable Positions For Shipping After Compressor Assembly

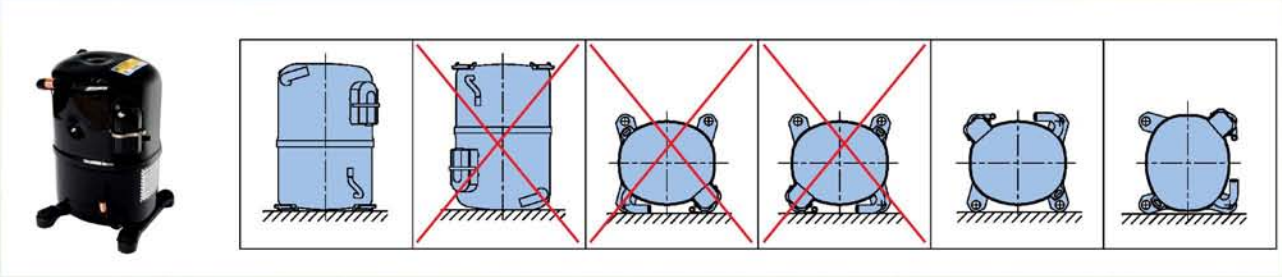

KA *Series*

Model	Voltage	Hz.	App.	Motor Type	Disp. (CC)	Cooling (BTU/Hr)	Cooling (W)	Input (W)	EER.	RLA (A)	LRA (A)	Start CAP. MFD	Start CAP. VAC.	Run CAP. MFD	Run CAP. VAC.	Dim. "A"
KA SERIES																**R 22**
380-420V/50Hz, 460V/60 Hz. (HIGH BACK PRESSURE)																
KA 5538EXG	380-420	50	HBP	3 PHASE	65	30,000	8,790	2,730	10.99	5.7	40	No	No	No	No	399
	460	60	HBP	3 PHASE	65	37,000	10,840	3,290	11.25	5.7	43	No	No	No	No	399
KA 5542EXG	380-420	50	HBP	3 PHASE	70	34,000	9,970	3,045	11.17	6.0	40	No	No	No	No	399
	460	60	HBP	3 PHASE	70	41,000	12,020	3,630	11.29	6.0	43	No	No	No	No	399
KA 5550EXG	380-420	50	HBP	3 PHASE	80	41,000	12,020	3,690	11.11	6.8	40	No	No	No	No	399
	460	60	HBP	3 PHASE	80	49,000	14,360	4,370	11.21	6.8	43	No	No	No	No	399
KA 5555EXG	380-420	50	HBP	3 PHASE	90	46,000	13,480	4,110	11.19	7.9	62	No	No	No	No	399
	460	60	HBP	3 PHASE	90	55,000	16,120	4,975	11.06	8.0	70	No	No	No	No	399
KA 5560EXG	380-420	50	HBP	3 PHASE	100	53,000	15,530	4,735	11.19	8.7	62	No	No	No	No	399
	460	60	HBP	3 PHASE	100	58,000	17,000	5,465	10.61	10.0	70	No	No	No	No	399
KA 5570EXG	380-420	50	HBP	3 PHASE	115	58,000	17,000	5,470	10.60	9.9	62	No	No	No	No	399
	460	60	HBP	3 PHASE	115	70,000	20,520	6,620	10.57	10.5	70	No	No	No	No	399
KA SERIES																**R 404A**
380-420V/50Hz, 460V/60 Hz. (COMMERCIAL BACK PRESSURE)																
KA 9522ZXG	380-420	50	CBP	3 PHASE	65	19,100	5,600	2,625	7.28	5.7	40	No	No	No	No	399
	460	60	CBP	3 PHASE	65	22,300	6,530	3,035	7.35	5.7	43	No	No	No	No	399
KA 9524ZXG	380-420	50	CBP	3 PHASE	70	20,800	6,100	2,800	7.43	6.0	40	No	No	No	No	399
	460	60	CBP	3 PHASE	70	23,400	6,860	3,200	7.31	6.0	43	No	No	No	No	399
KA 9528ZXG	380-420	50	CBP	3 PHASE	80	24,000	7,030	3,230	7.43	6.8	40	No	No	No	No	399
	460	60	CBP	3 PHASE	80	27,500	8,060	3,690	7.45	6.8	43	No	No	No	No	399
KA 9531ZXG	380-420	50	CBP	3 PHASE	90	28,600	8,380	3,675	7.78	7.9	62	No	No	No	No	399
	460	60	CBP	3 PHASE	90	31,000	9,080	4,090	7.58	8.0	70	No	No	No	No	399
KA 9535ZXG	380-420	50	CBP	3 PHASE	100	32,000	9,380	4,160	7.69	8.7	62	No	No	No	No	399
	460	60	CBP	3 PHASE	100	35,000	10,260	4,710	7.43	10.0	70	No	No	No	No	399
KA 9540ZXG	380-420	50	CBP	3 PHASE	115	36,800	10,790	4,880	7.54	9.9	62	No	No	No	No	399
	460	60	CBP	3 PHASE	115	40,500	11,870	5,600	7.23	10.5	70	No	No	No	No	399

KA Compressor

General Dimensions (mm.)

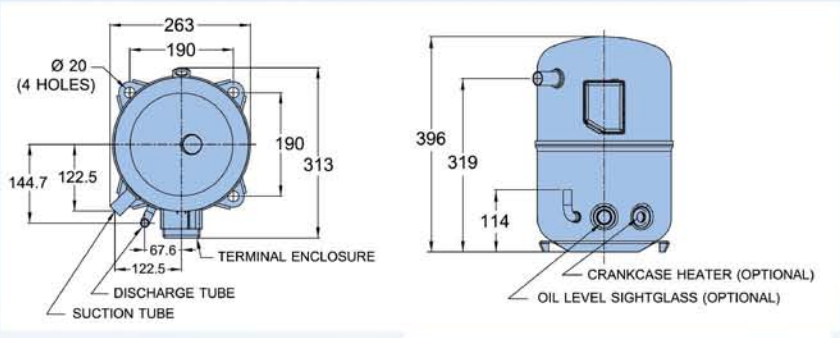

Allowable Positions For Shipping After Compressor Assembly

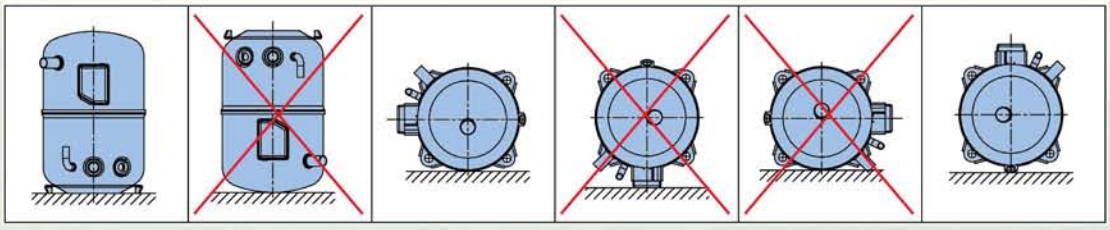

LA *Series*

Model	Voltage	Hz.	App.	Motor Type	Disp. (CC)	Cooling (BTU/Hr)	Cooling (W)	Input (W)	EER.	RLA (A)	LRA (A)	Start CAP. MFD	Start CAP. VAC.	Run CAP. MFD	Run CAP. VAC.	Dim. "A"
LA SERIES																R 22
380-420V/50Hz, 440-460V/60 Hz. (HIGH BACK PRESSURE)																
LA 5590EXG	380-420	50	HBP	3 PHASE	174	75,000	21,981	7,580	9.89	14.4	60	No	No	No	No	438
	440-460	60	HBP	3 PHASE	174	90,000	26,377	9,090	9.90	15.5	60	No	No	No	No	438
LA 5610EXG	380-420	50	HBP	3 PHASE	197	87,000	25,498	8,790	9.90	15.8	80	No	No	No	No	438
	440-460	60	HBP	3 PHASE	197	105,000	30,774	10,600	9.91	18.9	80	No	No	No	No	438
LA 5612EXG	380-420	50	HBP	3 PHASE	211	97,000	28,429	9,800	9.90	19.7	85	No	No	No	No	438
	440-460	60	HBP	3 PHASE	211	120,000	35,170	12,120	9.90	21.0	85	No	No	No	No	438
380V/60Hz (HIGH BACK PRESSURE)																
LA 5590EXI	380	60	HBP	3 PHASE	174	90,000	26,377	9,090	9.90	15.5	70	No	No	No	No	438
LA 5610EXI	380	60	HBP	3 PHASE	197	105,000	30,774	10,600	9.91	18.9	120	No	No	No	No	438
LA 5612EXI	380	60	HBP	3 PHASE	211	120,000	35,170	12,120	9.90	21.0	85	No	No	No	No	438
200-220V/50Hz, 220-230V/60 Hz. (HIGH BACK PRESSURE)																
LA 5590EXT	200-220	50	HBP	3 PHASE	174	75,000	21,981	7,580	9.89	22.3	121	No	No	No	No	438
	220-230	60	HBP	3 PHASE	174	90,000	26,377	9,090	9.90	26.7	121	No	No	No	No	438
LA 5610EXT	200-220	50	HBP	3 PHASE	197	87,000	25,498	8,790	9.90	27.0	208	No	No	No	No	438
	220-230	60	HBP	3 PHASE	197	105,000	30,774	10,600	9.91	32.7	208	No	No	No	No	438
LA 5612EXT	200-220	50	HBP	3 PHASE	211	97,000	28,429	9,800	9.90	19.7	85	No	No	No	No	438
	220-230	60	HBP	3 PHASE	211	120,000	35,170	12,120	9.90	21.0	85	No	No	No	No	438

LA Compressor

General Dimensions (mm.)

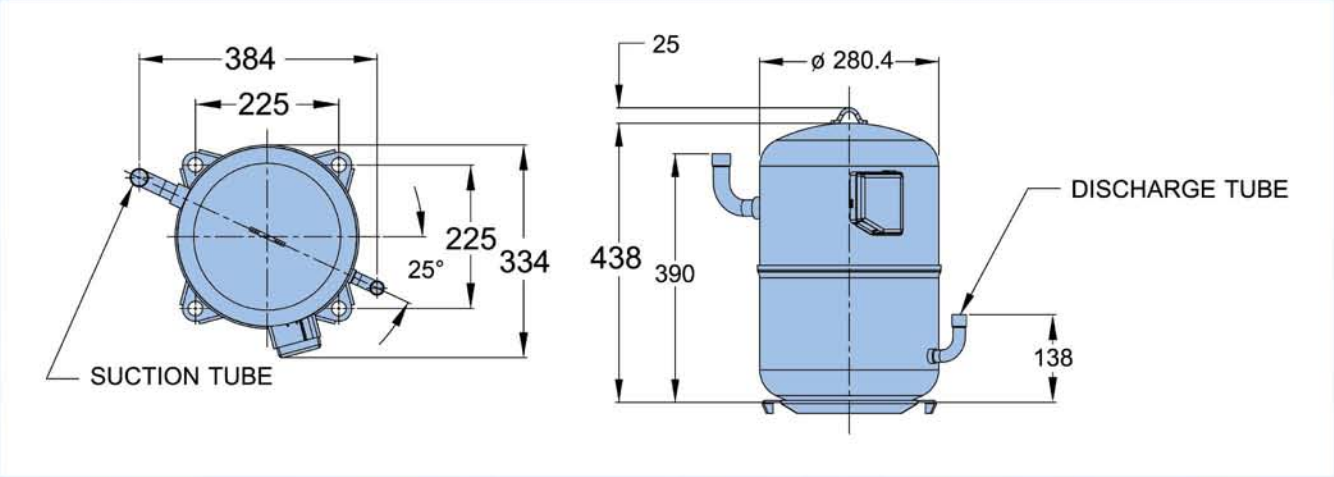

Allowable Positions For Shipping After Compressor Assembly

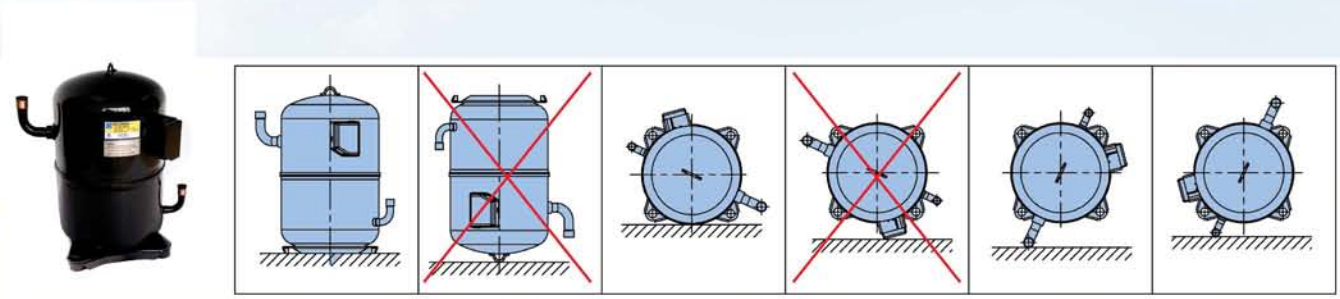

MOTOR TYPE / WIRING DIAGRAM

RSIR: Resistance Start Induction Run

RSIR motor with current relay:
The motors have a normal starting torque and are designed for completely self-equalizing capillary tube.

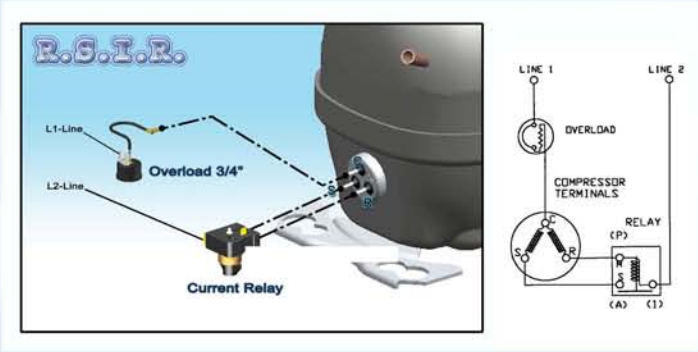

RSIR motor with PTC relay:
Motor functioning is similar to the RSIR with current relay, except that the current relay is replaced by a PTC relay.

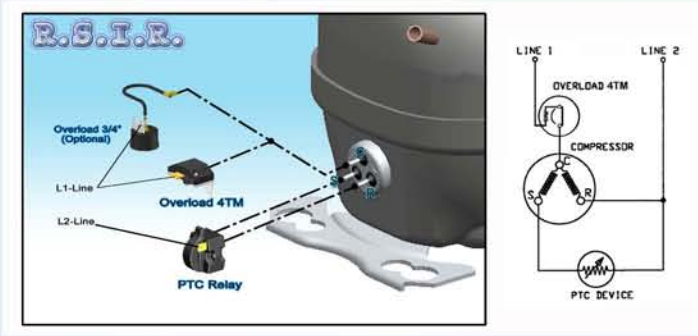

RSCR: Resistance Start Capacitor Run

The motors have a PTC starting torque and a run capacitor. Their functioning is similar to the PSC motor.
These compressors have a normal starting torque.

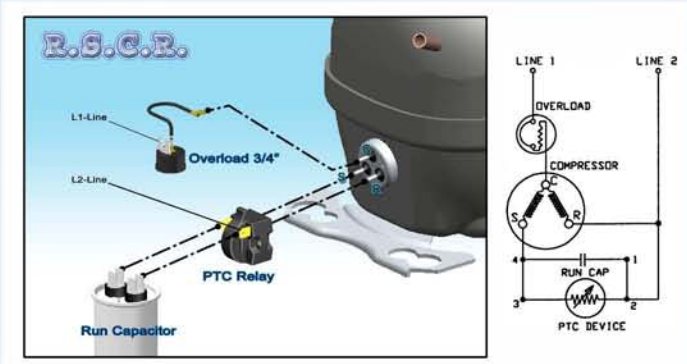

CSIR: Capacitor Start Induction Run

The motors have a high starting torque, using an electrolytic starting capacitor. Recommended for applications with capillary tube or expansion valve systems.

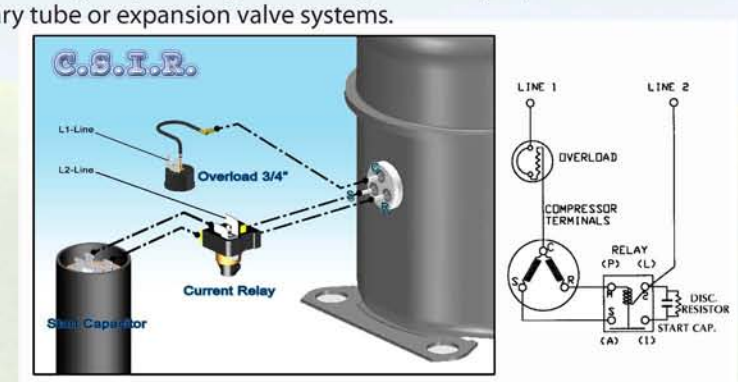

PSC: Permanent Split Capacitor

A run capacitor in series with the start winding produces a higher efficiency (EER) in comparison to a RSIR motor. They have a normal starting torque and are designed for capillary tube control devices, with equalized pressures.

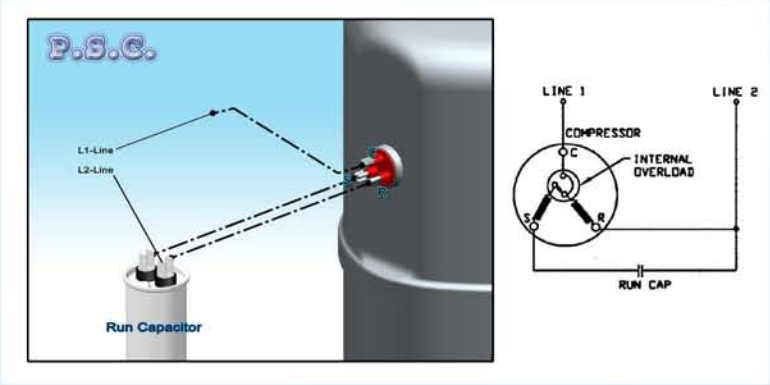

CSR: Capacitor Start Capacitor Run

This motor arrangement uses a start capacitor added to a PSC circuit. The high starting torque is suitable for unequalized systems with capillary tube or expansion valve, maintaining the same efficiency of a PSC motor.

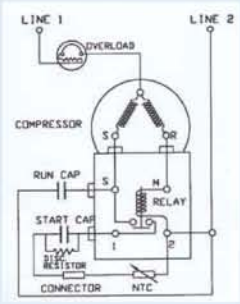

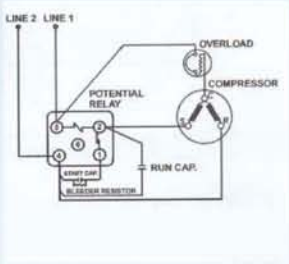

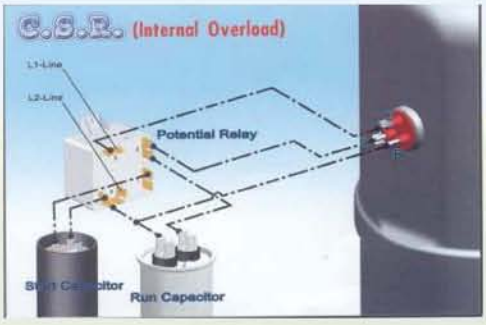

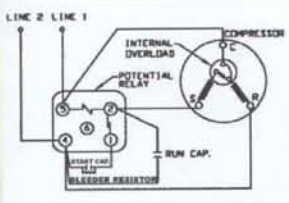

ELECTRICAL ASSEMBLY (NORMAL TYPE) FOR AE,BA SERIES

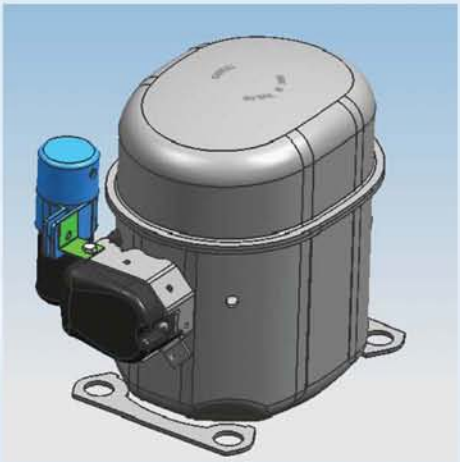

ELECTRICAL TERMINAL BOX FOR AE,BA SERIES

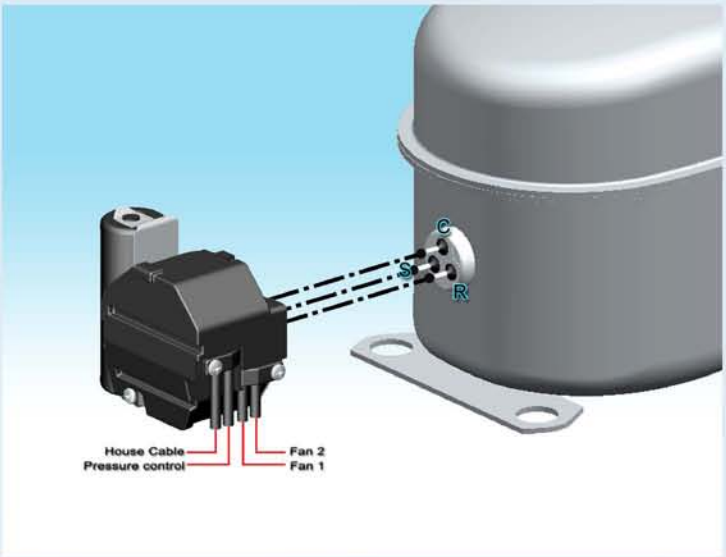

ELECTRICAL TERMINAL BOX FOR AW / WJ SERIES

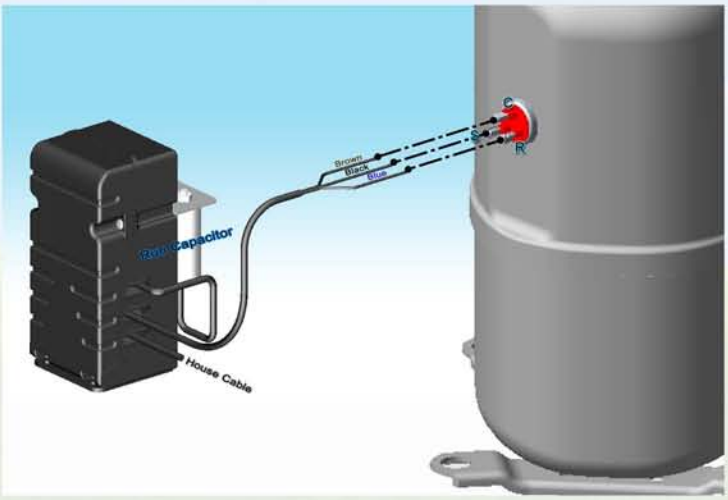

SERIAL PLATE LABEL & COMPRESSOR MOUNTING SYSTEM

Serial Plate Label

Compressor Mounting System

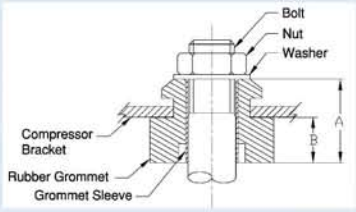

Type A

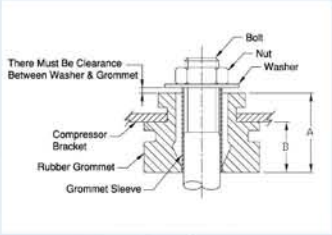

Type B

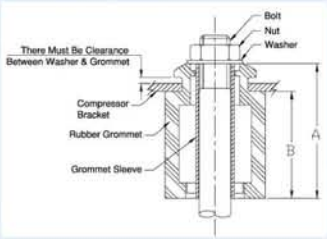

Type C

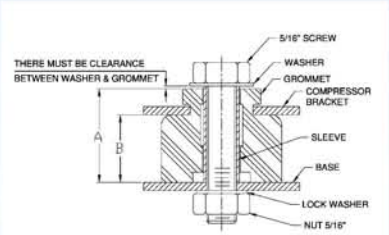

Type D

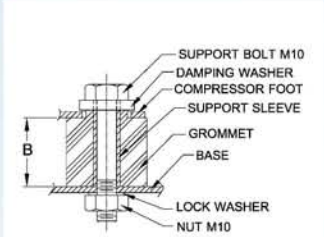

Type E

Series	Type	High "A" (mm.)	High "B" (mm.)
AZ, AZA	A	17.5	9.5
	B	21.8	13.9
AE, BA	B	21.8	13.9
	C	37	29
AW, WJ	D	28.5	20.6
KA, LA	E	-	35

3 Phase Motor

3 Phase Motor

Excellent starting torque, a wide operating voltage range, no ancillary starting devices (relays, capacitor), reduced starting load on any individual phase and minimal impact on nearby lighting, etc.

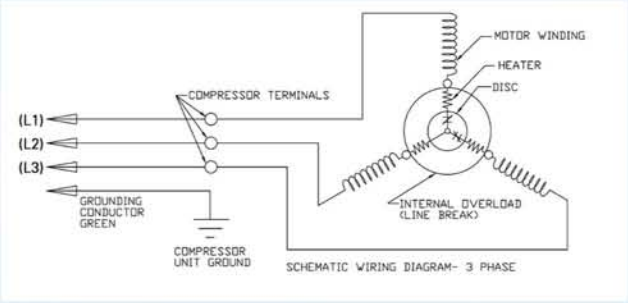

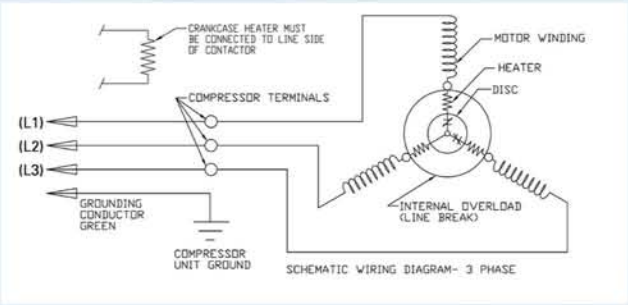

Rating Conditions (ASHRAE-T) for All Series

	LBP	MBP/CBP	HBP
- Evaporating Temp.	-10°F / -23°C	20°F / -7°C	45°F / 7°C
- Condensing Temp.	130°F / 54°C	130°F / 54°C	130°F / 54°C
- Return Gas Temp.	90°F / 32°C	95°F / 35°C	95°F / 35°C
- Liquid entering Temp. Expansion valve	90°F / 32°C	115°F / 46°C	115°F / 46°C
- Room Ambient	90°F / 32°C	95°F / 35°C	95°F / 35°C

Conversion Factor

Capacity in HP (Horse Power)

in High Back Pressure (HBP) and Air Conditioning (HBP-AC)

$$HP = \frac{\text{Performance at 60Hz in Btu/hr}}{12000}$$

in Medium / Commercial Back Pressure (M / CBP)

$$HP = \frac{\text{Performance at 60Hz in Btu/hr}}{8000}$$

in Low Back Pressure (LBP)

$$HP = \frac{\text{Performance at 60Hz in Btu/hr}}{4000}$$

CONDENSING UNITS

Model	App.	HP	Motor Type	Receiver Type	Nominal Capacity				Condensing Units Capacity Watts 50/60 Hz.				
					Watt		BTU/Hr		Saturated Suction Temperature °C				
					50 HZ	60 HZ	50 HZ	60 HZ	-40	-35	-30	-25	-23
CONDENSING UNITS													R12
AE 1360AA	LBP	1/5	R.S.I.R	LESS	203	244	693	832		110/130	140/170	150/180	203/244
AE 1380AA	LBP	1/4	R.S.I.R	LESS	228	274	778	934		125/150	165/200	210/250	228/274
AE 1410VA	LBP	1/3	R.S.I.R	LESS	278	334	949	1,139		165/200	205/245	260/310	278/334
AE 2410AA	LBP	1/3	C.S.I.R	LESS	337	404	1,150	1,380		165/200	205/245	270/325	337/404
AE 2410AC	LBP	1/3	C.S.I.R	WITH	337	404	1,150	1,380		165/200	205/245	270/325	337/404
AE 2413AA	LBP	3/8	C.S.I.R	LESS	404	485	1,378	1,654		165/200	255/305	325/390	404/485
AE 2413AC	LBP	3/8	C.S.I.R	WITH	404	485	1,378	1,654		165/200	255/305	325/390	404/485
AE 2415AA	LBP	1/2	C.S.I.R	LESS	475	570	1,620	1,944		215/260	315/380	420/505	475/570
AE 2415AC	LBP	1/2	C.S.I.R	WITH	475	570	1,620	1,944		215/260	315/380	420/505	475/570
AE 4430AA	HBP	1/4	C.S.I.R	LESS	623	748	2,126	2,551					
AE 4440AA	HBP	3/8	C.S.I.R	LESS	937	1,124	3,197	3,836					
CONDENSING UNITS													R22
AE 4422EA	HBP	1/5	C.S.I.R	LESS	507	608	1,730	2,076					
AE4422EC	HBP	1/5	C.S.I.R	WITH	507	608	1,730	2,076					
AE 4430EA	HBP	1/3	C.S.R	LESS	724	869	2,470	2,964					
AE 4430EC	HBP	1/3	C.S.R	WITH	724	869	2,470	2,964					
AE4440EA	HBP	3/8	C.S.R	LESS	903	1,084	3,081	3,697					
AE4440EC	HBP	3/8	C.S.R	WITH	903	1,084	3,081	3,697					
AE 4448EA	HBP	1/2	C.S.R	LESS	930	1,116	3,173	3,808					
AE 4448EC	HBP	1/2	C.S.R	WITH	930	1,116	3,173	3,808					
AE 4474EA	HBP	1/2	C.S.R	LESS	1,354	1,625	4,620	5,544					
AE 4474EC	HBP	1/2	C.S.R	WITH	1,354	1,625	4,620	5,544					
AW 5524EK	HBP	2	C.S.R	WITH	6,140	7,368	20,950	25,140					
AW 5530EK	HBP	2-1/2	C.S.R	WITH	7,317	8,780	25,000	30,000					
AW 5524EC	HBP		C.S.R										
AW 5530EC	HBP		C.S.R										
CAW 4520GE	MBP/HBP		C.S.R										
CAW 4524GE	MBP/HBP		C.S.R										
CAW 4528GE	MBP/HBP		C.S.R										
CAW 4532GE	MBP/HBP		C.S.R										
AE 7422EA	MBP	1/3	C.S.I.R	LESS	550	660	1,877	2,252					
CAE 7422EB	MBP		C.S.I.R										
AE 7426EA	MBP	1/3	C.S.I.R	LESS	704	845	2,402	2,882					
CAE 7426EB	MBP		C.S.I.R										
AE 7435EA	MBP	1/2	C.S.R	LESS	893	1,072	3,047	3,656					
AE 7440EA	MBP	1/2	C.S.R	LESS	1,011	1,213	3,450	4,140					
CAE 7435EB	MBP		C.S.R										
WJ 9460EA-S	CBP	5/8	C.S.R	LESS	1,495	1,794	5,101	6,121					
WJ 9470EA-S	CBP	3/4	C.S.R	LESS	1,728	2,074	5,896	7,075					
WJ 9480EA-S	CBP	1	C.S.R	LESS	1,970	2,364	6,722	8,066					
WJ 9485EA-S	CBP	1-1/4	C.S.R	LESS	2,159	2,591	7,367	8,840					
WJ 9510EA-S	CBP	1-3/8	C.S.R	LESS	2,461	2,953	8,397	10,076					
CONDENSING UNITS													R22/R407C
CWJ 9460GB	CBP	5/8	C.S.R		1,490	1,788	5,084	6,100					
CWJ 9470GB	CBP	3/4	C.S.R		1,700	2,040	5,800	6,960					
CWJ 9485GB	CBP	3/4	C.S.R		2,140	2,568	7,302	8,762					
CONDENSING UNITS													R134a
AE 1390YA	LBP	1/4	R.S.I.R	LESS	254	305	867	1,040		120/145	170/205	220/265	254/305
AE 2410YA	LBP	1/3	C.S.I.R	LESS	265	318	950	1,140		140/170	180/215	245/295	265/318
AE 2410YA-2	LBP		C.S.I.R										
AE 2413YA	LBP	3/8	C.S.R	LESS	369	443	1,259	1,511		180/215	240/290	315/380	369/443
AE A2410YC	LBP		C.S.I.R										
AEA2413YA	LBP	3/8	C.S.I.R	LESS	317	380	1,082	1,298		180/215	240/290	315/380	317/380
AEA2413YC	LBP	3/8	C.S.I.R	WITH	317	380	1,082	1,298		160/190	225/270	300/360	317/380
AEA2415YA	LBP	1/2	C.S.R	LESS	367	440	1,252	1,502		185/220	250/300	330/395	367/440
AEA2415YC	LBP	1/2	C.S.R	WITH	367	440	1,252	1,502		185/220	250/300	330/395	367/440
AE 4440YA	HBP	3/8	C.S.I.R	LESS	890	1,068	3,037	3,644					
AE 4440YC	HBP		C.S.I.R										
CAE 7430YB	MBP	1/3	C.S.I.R		745	894	2,542	3,050					
CAW 4515YE	MBP/HBP		C.S.R										
CAW 4517YE	MBP/HBP	5/8	C.S.R		2,150	2,580	7,336	880					
CAW 4519YE	MBP/HBP		C.S.R										
CWJ 9460YB	CBP	1/2	C.S.R		1,580	1,800	5,391	6,142					
AE 9437YC	LBP	5/8	C.S.R	WITH	454	545	1,550	1,860		190/230	254/305	320/385	454/545
	CBP		C.S.R		775	930	2,645	3,174					
AZ 0411YA	MBP	1/4	R.S.I.R	LESS	278	334	949	1,139					
CONDENSING UNITS													R404A
WJ 2430ZA-S	LBP	5/8	C.S.R	LESS	733	880	2,501	3,001	150/180	310/370	440/530	645/775	733/880
WJ 2435ZA-S	LBP	3/4	C.S.R	LESS	850	1,020	2,900	3,480	270/325	420/505	550/660	770/925	850/1,020
WJ 2440ZA-S	LBP	1	C.S.R	LESS	996	1,195	3,398	4,078	310/370	530/635	690/830	990/1,190	996/1,195
WJ 2450ZA-S	LBP	1-1/4	C.S.R	LESS	1,114	1,337	3,801	4,561	395/475	590/710	780/935	1,055/1,265	1,114/1,337
WJ 2455ZA-S	LBP	1-1/2	C.S.R	LESS	1,378	1,654	4,702	5,642	420/505	650/780	900/1,080	1,240/1,488	1,378/1,654
AW 2450ZC	LBP	1	C.S.R	WITH	1,466	1,759	5,002	6,002	525/630	770/925	1,070/1,285	1,380/1,656	1,466/1,759
AW 2462ZC	LBP	1-1/2	C.S.R	WITH	1,716	2,060	5,855	7,026	595/715	860/1,030	1,165/1,400	1,525/1,830	1,716/2,060
AW 2495ZC	LBP	2	C.S.R	WITH	2,248	2,697	7,670	9,204	735/880	1,100/1,320	1,695/2,035	2,180/2,616	2,248/2,697
CAW 2462ZB	LBP	1-1/3	C.S.R		1,525	1,830	5,203	6,243		436/523	818/981	1,298/1,557	1,525/1,830
CAW 2464ZB	LBP	1-1/3	C.S.R		1,580	1,896	5,391	6,469		460/552	924/1,108	1,415/1,698	1,580/1,896
CAW 2495ZB	LBP		C.S.R										
CBA 7440ZB	MBP		C.S.R										
CWJ 2435ZB	LBP	3/4	C.S.R		850	1,020	2,900	3,480		192/230	463/555	750/900	850/1,020
CWJ 2450ZB	LBP	1	C.S.R		1,114	1,336	3,801	4,561		307/368	623/747	982/1,178	1,114/1,336
CWJ 2455ZB	LBP		C.S.R										

CONDENSING UNITS

Condensing Units Capacity Watts 50/60 Hz. Saturated Suction Temperature °C									Dimensions (mm.)			Weight Kg.
-20	-15	-10	-7	-5	0	5	7	10	H	D	W	
CONDENSING UNITS												R12
240/290	295/355	355/425							249	450	340	16
265/320	325/390	385/460							249	450	340	16
320/385	385/460	435/520							249	450	340	16
405/485	470/565	495/595							249	450	340	20
405/485	470/565	495/595							249	450	340	21
410/490	490/590	575/690							249	450	340	20
410/490	490/590	575/690							249	450	340	21
480/575	565/680	640/765							249	450	340	20
480/575	565/680	640/765							249	450	340	21
	380/455	435/520		495/595	550/660	615/740	623/748	675/810	249	450	340	18
	490/590	570/685		670/805	775/930	870/1045	937/1,124	995/1,195	249	450	340	19
CONDENSING UNITS												R22
	220/265	260/310		310/370	345/415	475/570	507/608	530/635	249	450	340	18
	220/265	260/310		310/370	345/415	475/570	507/608	530/635	249	450	340	19
	370/445	440/530		495/595	545/655	615/740	724/869	780/935	249	450	340	19
	370/445	440/530		495/595	545/655	615/740	724/869	780/935	249	450	340	20
	400/480	530/635		650/780	750/900	860/1,030	903/1,084	985/1,180	249	450	340	19
	400/480	530/635		650/780	750/900	860/1,030	903/1,084	985/1,180	249	450	340	20
	440/530	560/670		670/805	780/935	910/1,090	930/1,116	1,035/1,240	249	450	340	19
	440/530	560/670		670/805	780/935	910/1,090	930/1,116	1,035/1,240	249	450	340	20
	645/775	745/895		940/1,130	1,055/1,265	1,255/.1505	1,354/1,625	1,430/1,715	304	450	340	20
	645/775	745/895		940/1,130	1,055/1,265	1,255/1,505	1,354/1,625	1,430/1,715	304	450	340	21
	2,455/2,945	3,100/3,720		3,865/4,640	4,515/5,420	5,160/6,190	6,140/7,368	7,380/8,855				
	3,385/4,060	4,015/4,820		4,655/5,585	5,320/6,385	6,635/7,960	7,317/8,780	7,850/9,420				
	430/515	510/610	550/660	650/780	710/850	815/980			249	450	340	18
	565/680	675/810	704/845	760/910	845/1,015	985/1,180			304	450	340	19
	465/560	650/780	893/1,072	960/1,150	1,045/1,255	1,105/1,325			304	450	340	20
	780/935	930/1,115	1,011/1,213	1,020/1,225	1,150/1,380	1,365/1,640			304	450	340	20
520/625	940/1,130	1,290/1,550	1,495/1,794	1,535/1,840	2,150/2,580	2,680/3,215		3,300/3,960	370	550	480	39
725/870	1,180/1,415	1,530/1,835	1,728/2,074	1,825/2,190	2,390/2,870	2,920/3,505		3,540/4,250	420	600	510	42
815/980	1,240/1,490	1,790/2,150	1,970/2,364	2,010/2,410		3,180/3,815		3,800/4,560	420	600	510	42
1,130/1,355	1,440/1,730	1,820/2,150	2,159/2,591	2,150/2,580		3,060/3,670		4,710/5,005	420	600	510	43
1,325/1,590	1,650/1,980	2,130/2,555	2,461/2,953	2,680/3,215		4,000/4,800		4,770/5,725	470	600	510	46
CONDENSING UNITS												R22/R407C
	892/1,070	1,234/1,480	1,490/1,788	1,619/1,942	2,072/2,486	2,616/3,139						
	1,080/1,296	1,422/1,706	1,700/2,040	1,810/2,172	2,255/2,706	2,768/3,321						
	1,408/1,689	1,841/2,209	2,140/2,568	2,360/2,832	2,957/3,548	3,629/4,354						
CONDENSING UNITS												R134a
290/350	360/430	436/525							249	450	340	17
305/365	410/490	495/595							249	450	340	18
385/460	475/570	545/655							249	450	340	20
385/460	475/570	545/655							249	450	340	19
355/425	455/545	520/625							249	450	340	21
415/500	530/635	645/775							249	450	340	20
415/500	530/635	645/775							249	450	340	21
	360/430	430/515		540/650	690/830	830/995	890/1,068	920/1,105	249	450	340	18
	493/591	637/764	745/894	807/968	1,014/1,216	1,270/1,524						
	1,198/1,437	1,719/2,062	2,150/2,580	2,331/2,797	3,042/3,650	3,836/4,635						
	1,049/1,258	1,361/1,633	1,580/1,896	1,694/2,032	2,047/2,456	2,420/2,904						
470/565	550/660	660/790										
	435/520	555/665	775/930	780/935	830/995	920/1,105			304	450	340	22
	180/215	225/270	278/334	285/340	315/378	375/450		430/516	249	450	340	16
CONDENSING UNITS												R404A
950/1,140	1,265/1,520								370	550	480	37
1,065/1,280	1,340/1,610								370	550	480	37
1,180/1,415	1,410/1,690								370	550	480	38
1,350/1,620	1,580/1,895								370	550	480	40
1,720/2,065	2,230/2,675								370	550	480	40
1,655/1,985	1,955/2,345								363	605	455	49
1,780/2,135	1,950/2,340								415	655	520	57
2,735/3,280	3,415/4,100								510	640	855	76
1,898/2,277	2,638/3,165											
1,942/2,330	2,518/3,021											
1,066/1,279	1426/1,711											
1,376/1,651	1,800/2,160											